YAMAHA

YFM660FR

5KM2-AE2

SUPPLEMENTARY SERVICE MANUAL

FOREWORD

This Supplementary Service Manual has been prepared to introduce new service and data for the YFM660FR. For complete service information procedures it is necessary to use this Supplementary Service Manual together with the following manual.

YFM660F(P) 2002 SERVICE MANUAL: 5KM2-AE1

YFM660FR
SUPPLEMENTARY
SERVICE MANUAL
©2002 by Yamaha Motor Co., Ltd.
First edition, June 2002
All rights reserved.
Any reproduction or unauthorized use without the written permission of Yamaha Motor Co., Ltd. is expressly prohibited.

EB001000

NOTICE

This manual was produced by the Yamaha Motor Company primarily for use by Yamaha dealers and their qualified mechanics. It is not possible to include all the knowledge of a mechanic in one manual, so it is assumed that anyone who uses this book to perform maintenance and repairs on Yamaha machine has a basic understanding of the mechanical ideas and the procedures of machine repair. Repairs attempted by anyone without this knowledge are likely to render the machine unsafe and unfit for use.

Yamaha Motor Company, Ltd. is continually striving to improve all its models. Modifications and significant changes in specifications or procedures will be forwarded to all authorized Yamaha dealers and will appear in future editions of this manual where applicable.

NOTE:
Designs and specifications are subject to change without notice.

IMPORTANT INFORMATION

Particularly important information is distinguished in this manual by the following notations.

⚠	The Safety Alert Symbol means ATTENTION! BECOME ALERT! YOUR SAFETY IS INVOLVED!
⚠ WARNING	Failure to follow WARNING instructions could result in severe injury or death to the machine operator, a bystander or a person inspecting or repairing the machine.
CAUTION:	A CAUTION indicates special precautions that must be taken to avoid damage to the machine.
NOTE:	A NOTE provides key information to make procedures easier or clearer.

EB002000

HOW TO USE THIS MANUAL

MANUAL ORGANIZATION

This manual consists of chapters for the main categories of subjects. (See “Illustrated symbols”)

1st title ①: This is the title of the chapter with its symbol in the upper right corner of each page.

2nd title ②: This title indicates the section of the chapter and only appears on the first page of each section. It is located in the upper left corner of the page.

3rd title ③: This title indicates a sub-section that is followed by step-by-step procedures accompanied by corresponding illustrations.

EXPLODED DIAGRAMS

To help identify parts and clarify procedure steps, there are exploded diagrams at the start of each removal and disassembly section.

1. An easy-to-see exploded diagram ④ is provided for removal and disassembly jobs.
2. Numbers ⑤ are given in the order of the jobs in the exploded diagram. A number that is enclosed by a circle indicates a disassembly step.
3. An explanation of jobs and notes is presented in an easy-to-read way by the use of symbol marks ⑥. The meanings of the symbol marks are given on the next page.
4. A job instruction chart ⑦ accompanies the exploded diagram, providing the order of jobs, names of parts, notes in jobs, etc.
5. For jobs requiring more information, the step-by-step format supplements ⑧ are given in addition to the exploded diagram and the job instruction chart.

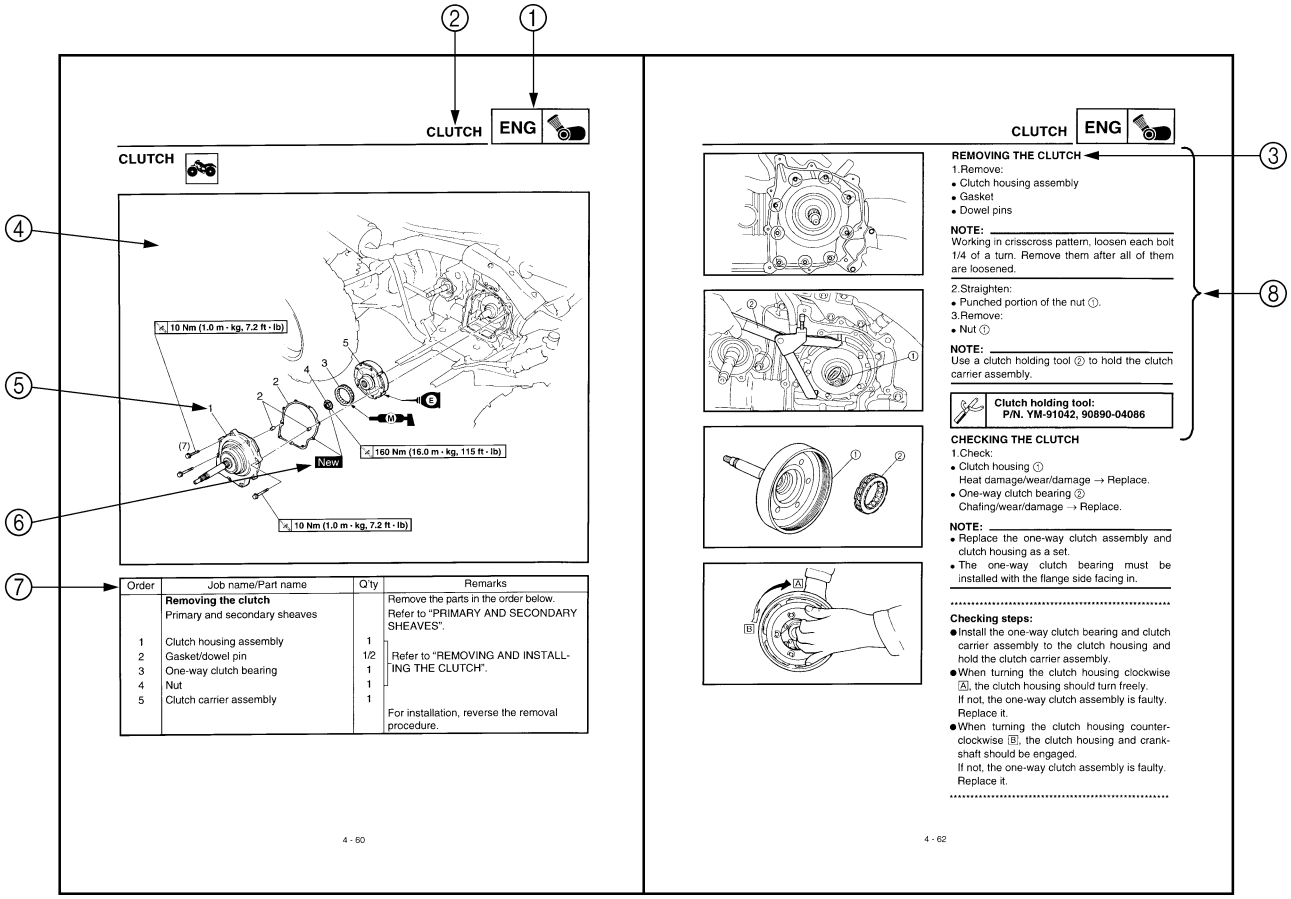

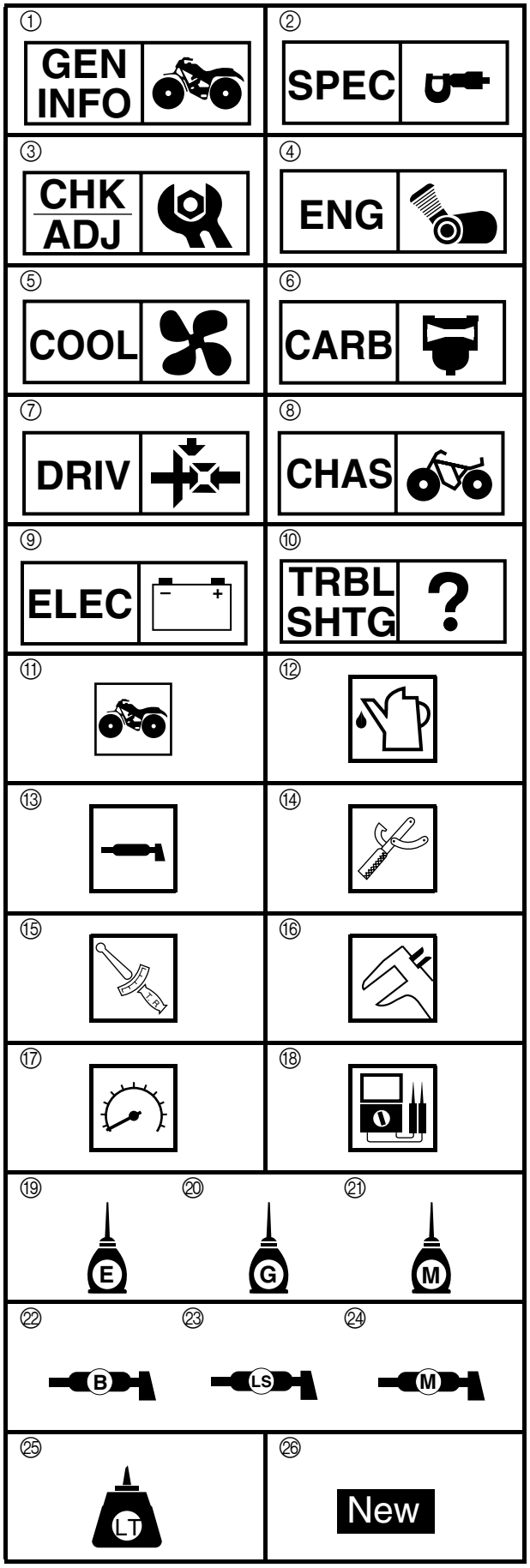

EB003000

ILLUSTRATED SYMBOLS

Illustrated symbols ① to ⑩ are printed on the top right of each page and indicate the subject of each chapter.

① General information
② Specifications
③ Periodic checks and adjustments
④ Engine
⑤ Cooling system
⑥ Carburetion
⑦ Drive train
⑧ Chassis
⑨ Electrical
⑩ Troubleshooting

Illustrated symbols ⑪ to ⑱ are used to identify the specifications appearing in the text.

⑪ Can be serviced with engine mounted
⑫ Filling fluid
⑬ Lubricant
⑭ Special tool
⑮ Torque
⑯ Wear limit, clearance
⑰ Engine speed
⑱ Ω, V, A

Illustrated symbols ⑲ to ㉔ in the exploded diagrams indicate the types of lubricants and lubrication points.

⑲ Apply engine oil
⑳ Apply gear oil
㉑ Apply molybdenum disulfide oil
㉒ Apply wheel bearing grease
㉓ Apply lightweight lithium-soap-based grease
㉔ Apply molybdenum disulfide grease

Illustrated symbols ㉕ to ㉖ in the exploded diagrams indicate where to apply a locking agent ㉕ and when to install a new part ㉖.

㉕ Apply the locking agent (LOCTITE®)
㉖ Replace

CONTENTS

GENERAL INFORMATION 1
SPECIAL TOOLS 1

SPECIFICATIONS 2
GENERAL SPECIFICATIONS 2
MAINTENANCE SPECIFICATIONS 3
ENGINE 3
ELECTRICAL 3
TIGHTENING TORQUES 4
CABLE ROUTING 5

PERIODIC CHECKS AND ADJUSTMENTS 12
INTRODUCTION 12
PERIODIC MAINTENANCE/LUBRICATION 12
SEAT, CARRIERS, FENDERS AND FUEL TANK 14
FRONT CARRIER, FRONT BUMPER AND FRONT GRILL 14
FUEL TANK 15
FOOTREST BOARDS 17
ENGINE 18
CHECKING THE STARTER CABLE 18

ENGINE 19
CAMSHAFT AND CYLINDER HEAD 19
RECOIL STARTER AND AC MAGNETO 21
CHECKING THE STARTER CLUTCH 23
MIDDLE GEAR 24
MIDDLE DRIVEN SHAFT 24
REMOVING THE MIDDLE DRIVEN SHAFT 26
INSTALLING THE MIDDLE DRIVEN SHAFT 28

DRIVE TRAIN 30
FRONT CONSTANT VELOCITY JOINTS
AND DIFFERENTIAL GEAR 30
DISASSEMBLING THE DIFFERENTIAL GEAR 34
CHECKING THE DIFFERENTIAL GEAR 34
ASSEMBLING THE DIFFERENTIAL GEAR 35

CHASSIS 37
FRONT WHEELS AND BRAKE DISCS 37
FRONT WHEELS 37
REAR WHEELS AND BRAKE DISC 39
REAR WHEELS 39
STEERING SYSTEM 40
TIE ROD AND STEERING KNUCKLE 40
CHECKING THE STEERING KNUCKLE 42
REAR KNUCKLE AND STABILIZER 43
CHECKING THE REAR KNUCKLE 44
REAR ARMS AND REAR SHOCK ABSORBER 45

GENERAL INFORMATION

EB102001
SPECIAL TOOLS

The following special tools are necessary for complete and accurate tune-up and assembly. Use only the appropriate special tools; this will help prevent damage caused by the use of inappropriate tools or improvised techniques. Special tools may differ by shape and part number from country to country. In such a case, two types are provided.
When placing an order, refer to the list provided below to avoid any mistakes.

For US and CDN
P/N. YM-, YU-, YS-, YK-, ACC-
Except for US and CDN
P/N. 90890-

Tool No.	Tool name/How to use	Illustration
90890-01486 YM-01486	Coupling gear holding tool This tool is needed when removing or installing the coupling gear nut.	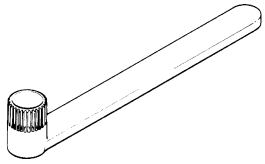

SPECIFICATIONS

GENERAL SPECIFICATIONS

Item	Standard
Model code:	5KM9: (for CDN) 5KMB: (for Europe) 5KMC: (for Oceania)
Bulb wattage × quantity:	
Headlight	12 V 30 W/30 W × 2
Tail/brake light	12 V 5 W/21 W × 1
Indicator lights	
Neutral	LED × 1
Fuel	LCD × 1
Reverse	LED × 1
Coolant temperature warning	LED × 1
Park position	LED × 1
High gear	LED × 1
Low gear	LED × 1
Diff-lock	LED × 1

MAINTENANCE SPECIFICATIONS

ENGINE

Item	Standard	Limit
Oil pump:		
Oil filter type	Foam	----
Oil pump type	Trochoid	----
Tip clearance “A” or “B”	0.03 ~ 0.10 mm (0.0012 ~ 0.0039 in)	0.15 mm (0.006 in)
Side clearance	0.03 ~ 0.10 mm (0.0012 ~ 0.0039 in)	0.17 mm (0.007 in)
Bypass valve setting pressure	441 ~ 637 kPa (4.41 ~ 6.37 kg/cm^2, 62.7 ~ 90.6 psi)	----
Oil pressure (hot)	65 kPa (0.65 kg/cm^2, 9.2 psi) at 1,500 r/min	----
Pressure check location	Cylinder head	----

ELECTRICAL

Item	Standard	Limit
C.D.I.:		
Magneto model/manufacturer	F4T46972/MITSUBISHI	----
Pickup coil resistance/color	459 ~ 561 Ω at 20 °C (68 °F)/ White/Red – White/Green	----
Rotor rotation direction sensing coil resistance/color	0.063 ~ 0.077 Ω at 20 °C (68 °F)/ Red – White/Blue	----
C.D.I. unit model/manufacturer	F8T38671/MITSUBISHI	----
Charging system:		
Type	A.C. magneto generator	----
Model/manufacturer	F4T469/MITSUBISHI	----
Nominal output	14 V 21 A at 5,000 r/min	----
Charging coil resistance/color	0.32 ~ 0.43 Ω at 20 °C (68 °F)/ White – White	----

TIGHTENING TORQUES

Engine tightening torques

Part to be tightened	Part name	Thread size	Q'ty	Tightening torque			Remarks
				Nm	m·kg	ft·lb	
Exhaust pipe protector	Bolt	M6	5	11	1.1	8	
Oil seal retainer	Screw	M5	2	7	0.7	5.1	

Chassis tightening torques

Part to be tightened	Thread size	Tightening torque			Remarks
		Nm	m·kg	ft·lb	
Front wheel hub and constant velocity joint	M20	260	26.0	190	Stake
Rear wheel hub and constant velocity joint	M20	260	26.0	190	Stake
Front brake master cylinder and handlebar	M8	7	0.7	5.1	

CABLE ROUTING

① Fuel sender lead
② Differential gear case and final drive gear case breather hose
③ Vacuum chamber breather hose
④ Starter motor lead
⑤ Wire harness
⑥ Gear position switch lead
⑦ Final drive gear case breather hose
⑧ Ground lead
⑨ Speed sensor lead
⑩ AC magneto lead
⑪ Carburetor breather hose
⑫ Starter cable
⑬ Fuel hose
⑭ Thermo switch 1 lead
⑮ Reverse switch lead
⑯ AC magneto coupler
⑰ Gear position switch coupler
⑱ Speed sensor coupler
⑲ Radiator fan breather hose
⑳ Rectifier/regulator lead
㉑ Water pump breather hose

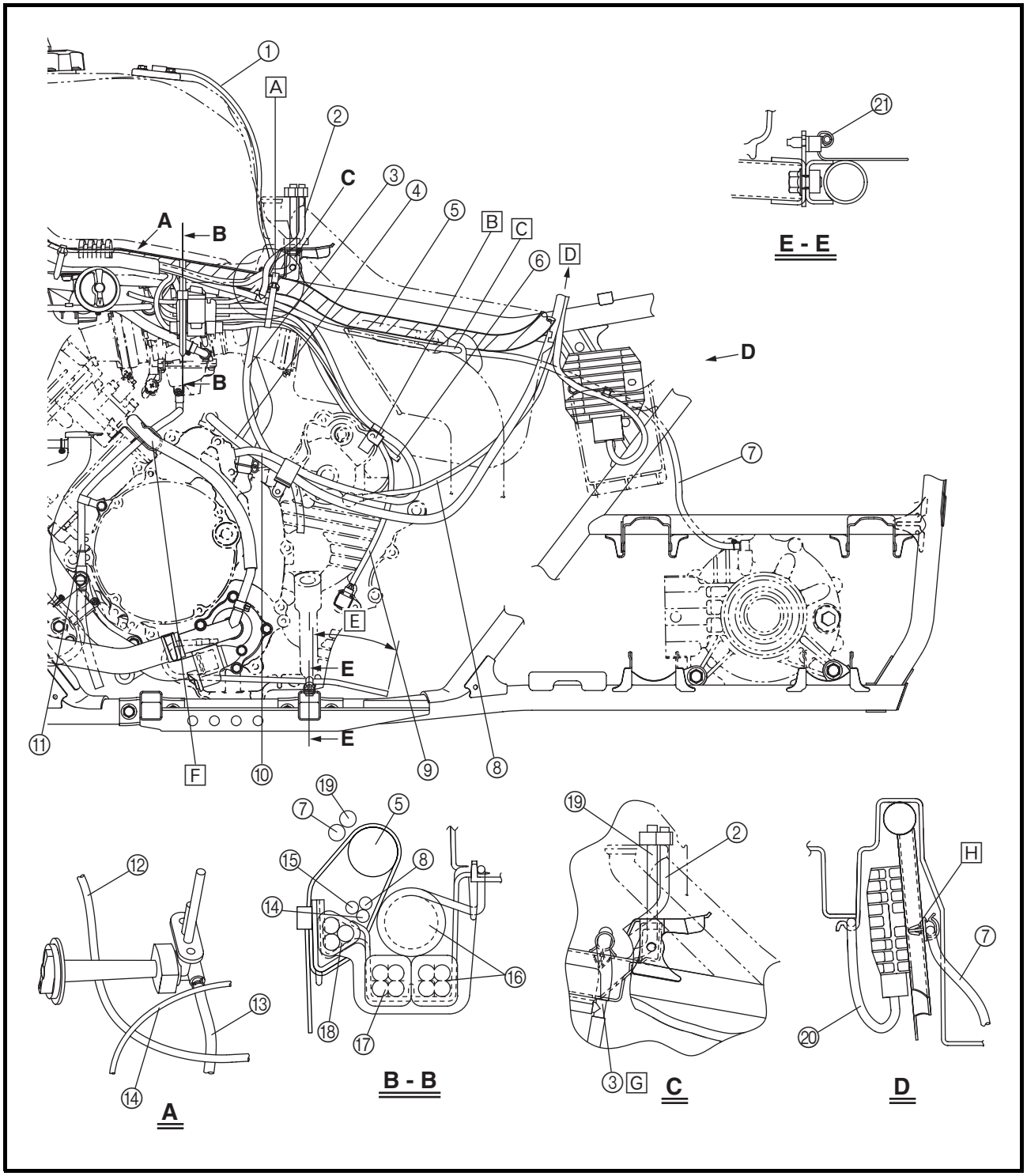

[A] Fasten the final drive gear case breather hose, speed sensor lead, ground lead, gear position switch lead, AC magneto lead, wire harness, and reverse indicator light lead with a plastic locking tie. Be careful not to pinch the breather hose.
[B] Fasten the leads in the following order: ground lead, reverse switch lead, speed sensor lead, gear position switch lead, and AC magneto lead.
[C] Pass the final drive gear case breather hose through the hole in air duct assembly 3.
[D] To the rear fender
[E] 70 ~ 90 mm (2.8 ~ 3.5 in)
[F] Clamp the thermostat assembly breather hose and carburetor breather hose with the cable guide.

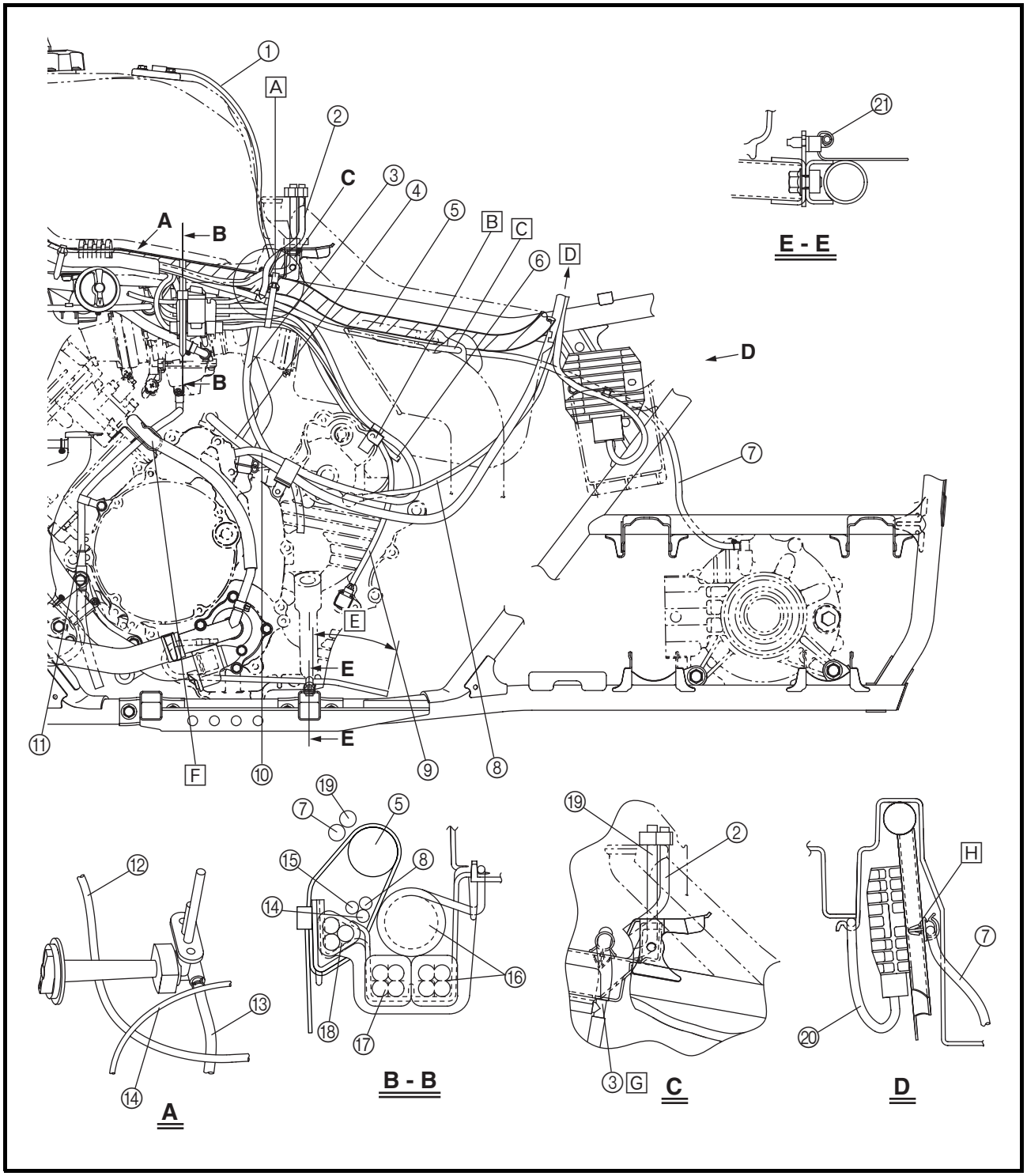

G Pass the vacuum chamber breather hose through the plastic cover hole.
H Insert a hook into the third hole from the bottom of the rectifier/regulator bracket, and then fasten the final drive gear case breather hose onto the hook.

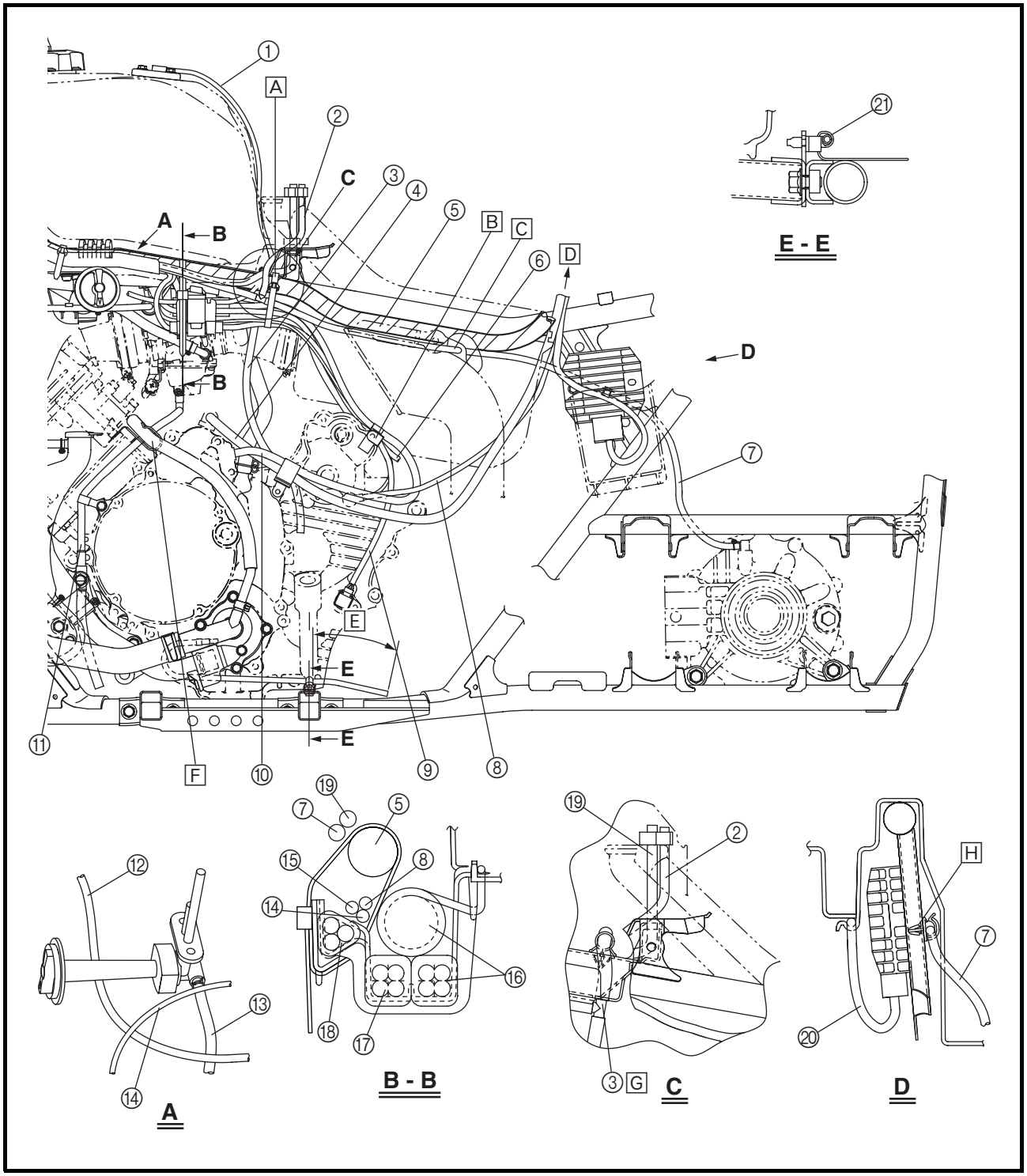

① Gear position switch
② Reverse switch
③ Crankcase breather hose
④ Select lever control cable
⑤ Rear brake cable
⑥ Front brake hose
⑦ Rear brake light switch lead
⑧ Spark plug lead
⑨ Fan motor breather hose
⑩ Fan motor lead
⑪ Brake fluid reservoir hose
⑫ Rear brake hose

A Pass the rear brake cable and throttle cable through the cable guide.
B Pass the rear brake light switch lead, main switch lead and auxiliary DC jack lead over the front fender.

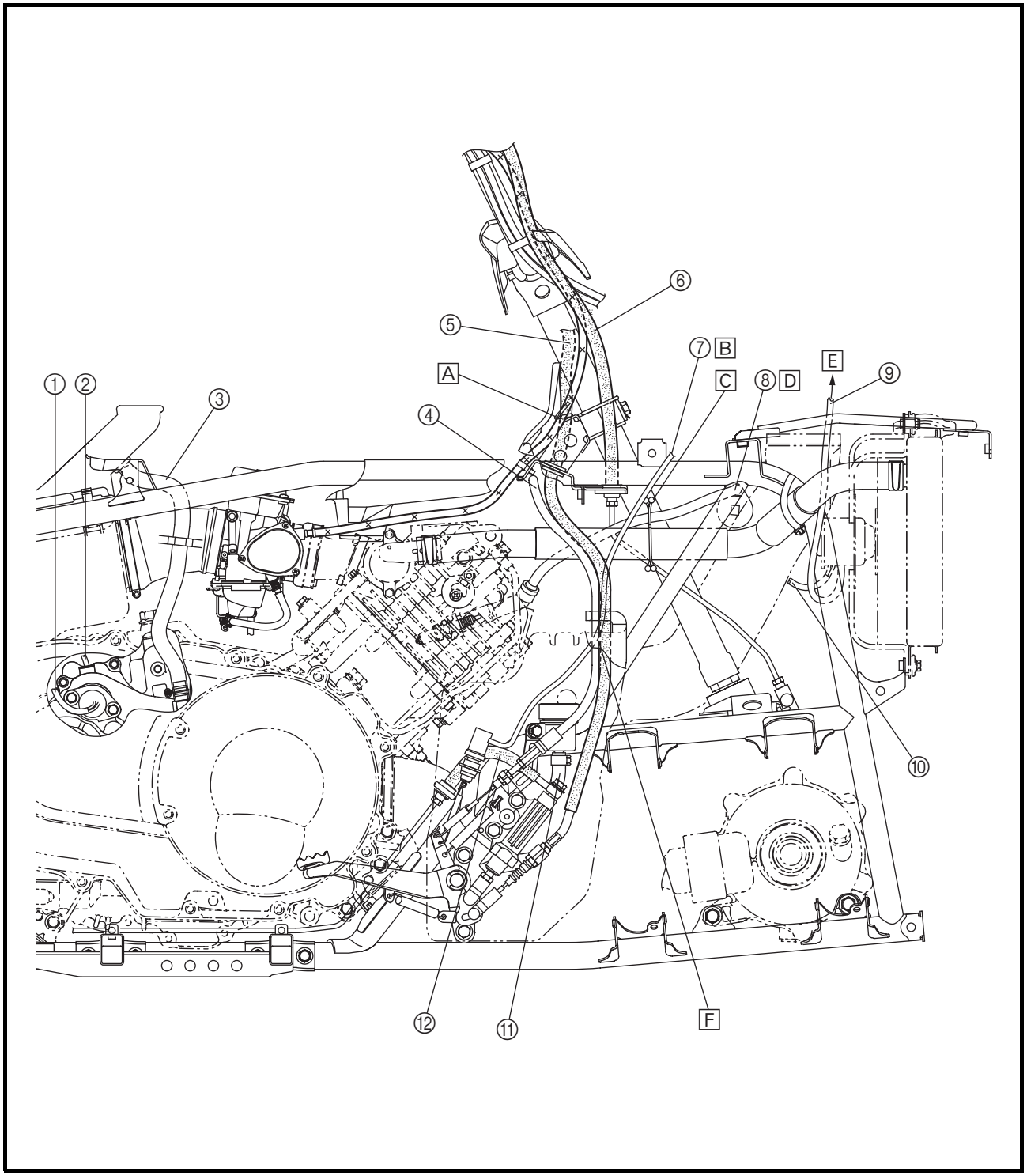

C Clamp the spark plug lead and radiator inlet hose with a plastic clip.
D When installing the ignition coil, face the spark plug lead to the right side of the frame.
E To the rear fender hole
F Pass the brake light switch lead on the inside of the rear brake cable and select lever control cable, and through the cable guide of the brake master cylinder cover.

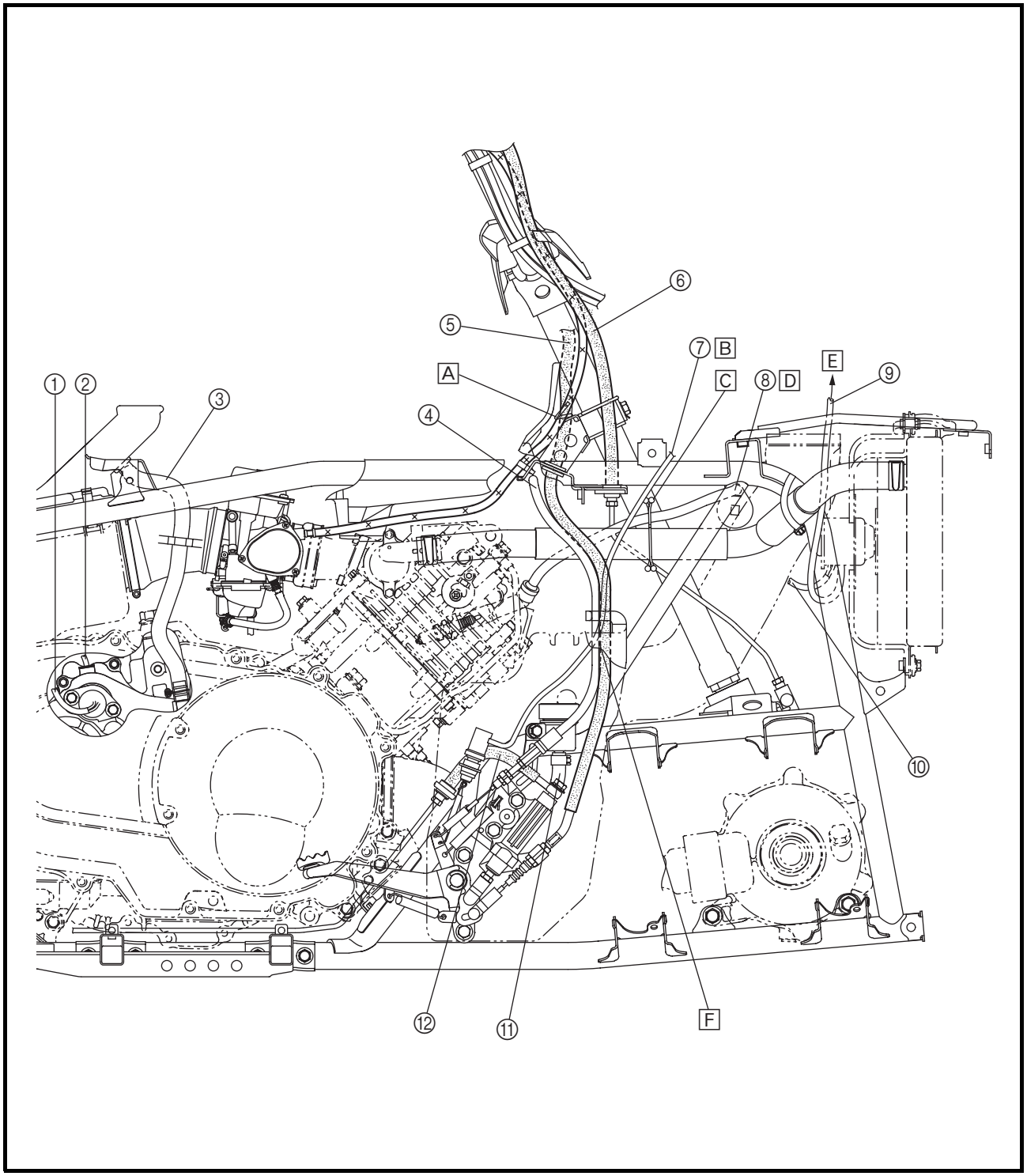

① Front brake hose
② Throttle cable
③ Thermo switch 1 lead
④ Crankcase breather hose
⑤ Fuel sender lead
⑥ Differential gear case breather hose
⑦ Starter cable
⑧ Select lever control cable
⑨ Wire harness
⑩ Fan motor breather hose

A Pass the thermo sensor 1 lead through the lead guide.
B Pass the crankcase breather hose through the hose guide.
C Pass the fuel sender lead through the lead guide.
D Pass the select lever control cable through the hole of the select lever unit bracket.
E Clamp the starter cable with a cable holder.
F Pass the throttle cable through the cable guide.

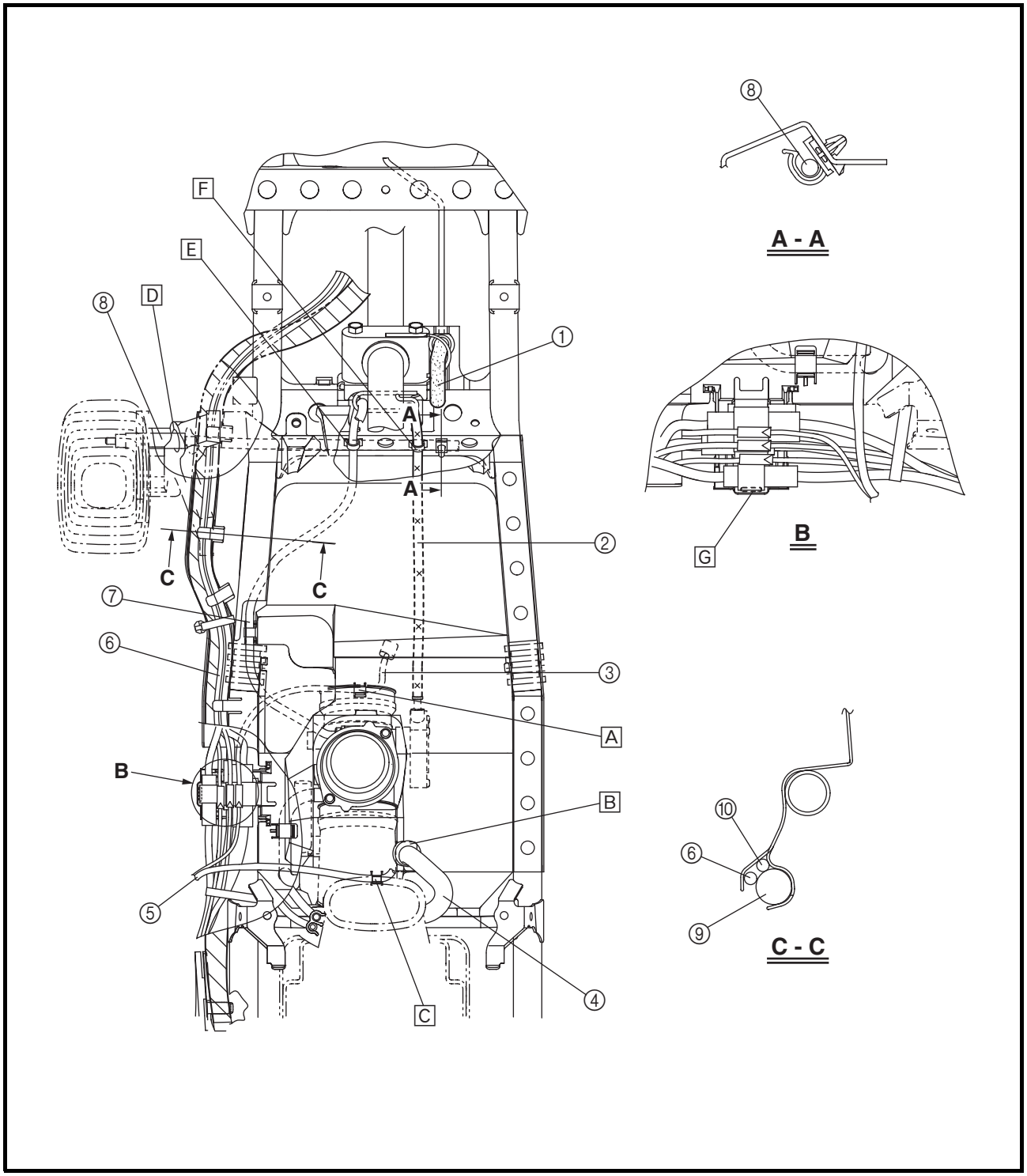

[G] Fasten the wire harness speed sensor coupler, thermo switch 1 lead, reverse switch lead, and ground lead with a plastic locking tie.

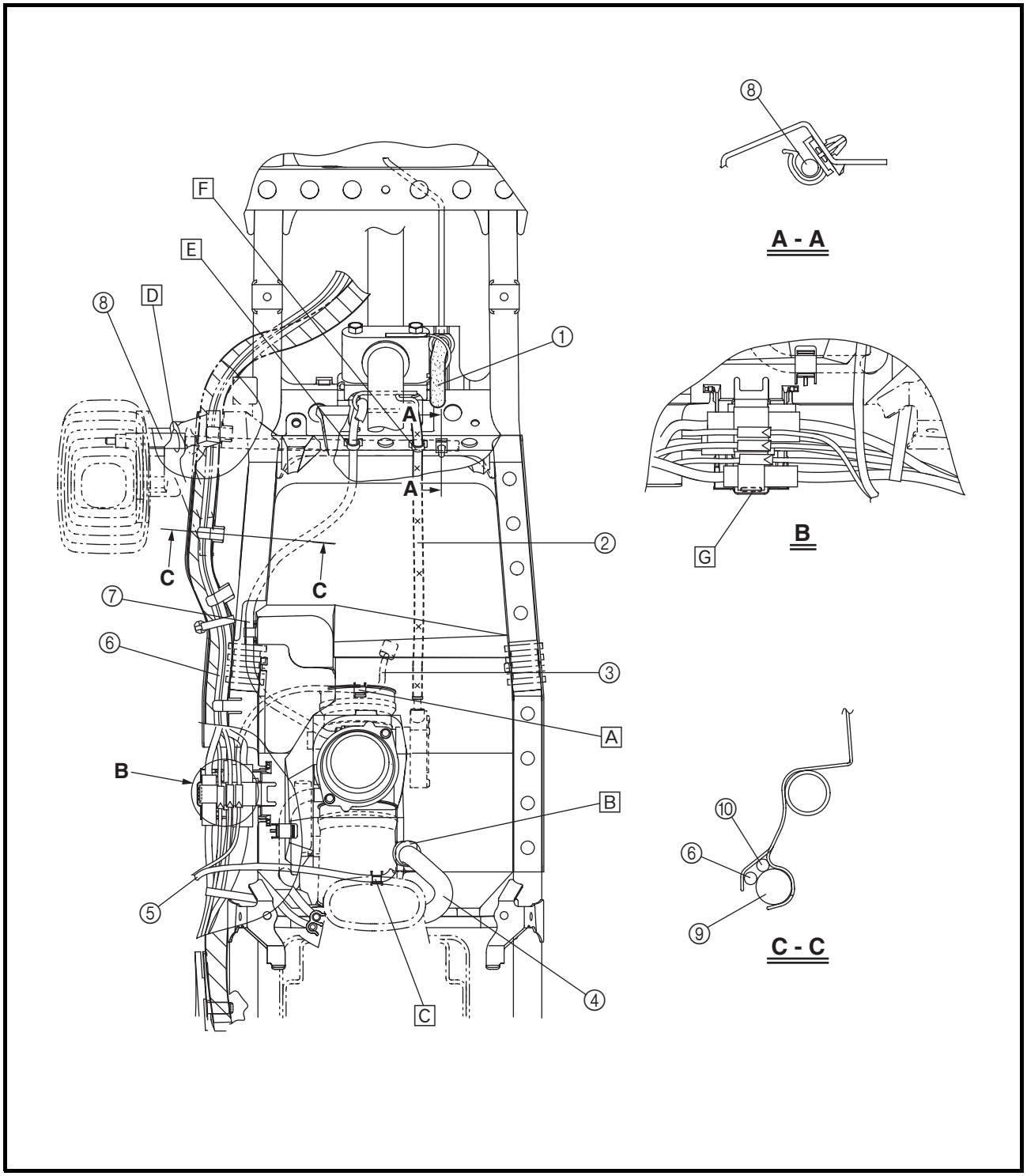

EB300000

PERIODIC CHECKS AND ADJUSTMENTS

INTRODUCTION

This chapter includes all information necessary to perform recommended inspections and adjustments. These preventive maintenance procedures, if followed, will ensure more reliable vehicle operation and a longer service life. The need for costly overhaul work will be greatly reduced. This information applies to vehicles already in service as well as to new vehicles that are being prepared for sale. All service technicians should be familiar with this entire chapter.

EBU00261

PERIODIC MAINTENANCE/LUBRICATION

ITEM	ROUTINE	Whichever comes first ⇨		INITIAL			EVERY	
			km (mile)	320 (200)	1,200 (750)	2,400 (1,500)	2,400 (1,500)	4,800 (3,000)
			hours	20	75	150	150	300
Valves*	• Check valve clearance. • Adjust if necessary.			○		○	○	○
Cooling system	• Check coolant leakage. • Repair if necessary. • Replace coolant every 24 months.			○	○	○	○	○
Spark plug	• Check condition. • Adjust gap and clean. • Replace if necessary.			○	○	○	○	○
Air filter	• Clean. • Replace if necessary.			Every 20 ~ 40 hours (More often in wet or dusty areas.)				
Carburetor*	• Check and adjust idle speed/starter operation. • Adjust if necessary.				○	○	○	○
Crankcase breather system*	• Check breather hose for cracks or damage. • Replace if necessary.					○	○	○
Exhaust system*	• Check for leakage. • Retighten if necessary. • Replace gasket(s) if necessary.					○	○	○
Fuel line*	• Check fuel hose for cracks or damage. • Replace if necessary.					○	○	○
Engine oil	• Replace (Warm engine before draining).			○		○	○	○
Engine oil filter cartridge	• Replace.			○		○		○
Final gear oil **Differential gear oil**	• Check oil level/oil leakage. • Replace.			○				○
Front brake*	• Check operation/fluid leakage/see NOTE page 13. • Correct if necessary.			○	○	○	○	○
Rear brake*	• Check operation/fluid leakage/see NOTE page 13. • Correct if necessary.			○	○	○	○	○
V-belt*	• Check operation. • Check for cracks or damage.			○			○	○
Wheels*	• Check balance/damage/runout. • Repair if necessary.			○		○	○	○

ITEM	ROUTINE	Whichever comes first ⇨		INITIAL			EVERY	
			km (mile)	320 (200)	1,200 (750)	2,400 (1,500)	2,400 (1,500)	4,800 (3,000)
			hours	20	75	150	150	300
Wheel bearing*	• Check bearing assemblies for looseness/damage. • Replace if damaged.			○		○	○	○
Front and rear suspension*	• Check operation. • Correct if necessary.					○		○
Steering system*	• Check operation/Replace if damaged. • Check toe-in/Adjust if necessary.			○	○	○	○	○
Rear upper and lower knuckle pivots*	• Lubricate.**					○	○	○
Drive shaft universal joint*	• Lubricate.**					○	○	○
Engine mount*	• Check for cracks or damage.					○	○	○
Front and rear axle boots*	• Check operation. • Replace if damaged.			○				○
Stabilizer bushes*	• Check for cracks or damage.					○	○	○
Fittings and Fasteners*	• Check all chassis fittings and fasteners. • Correct if necessary.			○	○	○	○	○

* It is recommended that these items be serviced by a Yamaha dealer.
** Lithium-soap-based grease

NOTE:

- Recommended brake fluid: DOT 4
- Brake fluid replacement:

1. When disassembling the master cylinder or caliper, replace the brake fluid. Normally check the brake fluid level and add fluid as required.
2. On the inner parts of the master cylinder and caliper, replace the oil seals every two years.
3. Replace the brake hoses every four years, or if cracked or damaged.

⚠ WARNING

Indicates a potential hazard that could result in serious injury or death.

SEAT, CARRIERS, FENDERS AND FUEL TANK

FRONT CARRIER, FRONT BUMPER AND FRONT GRILL

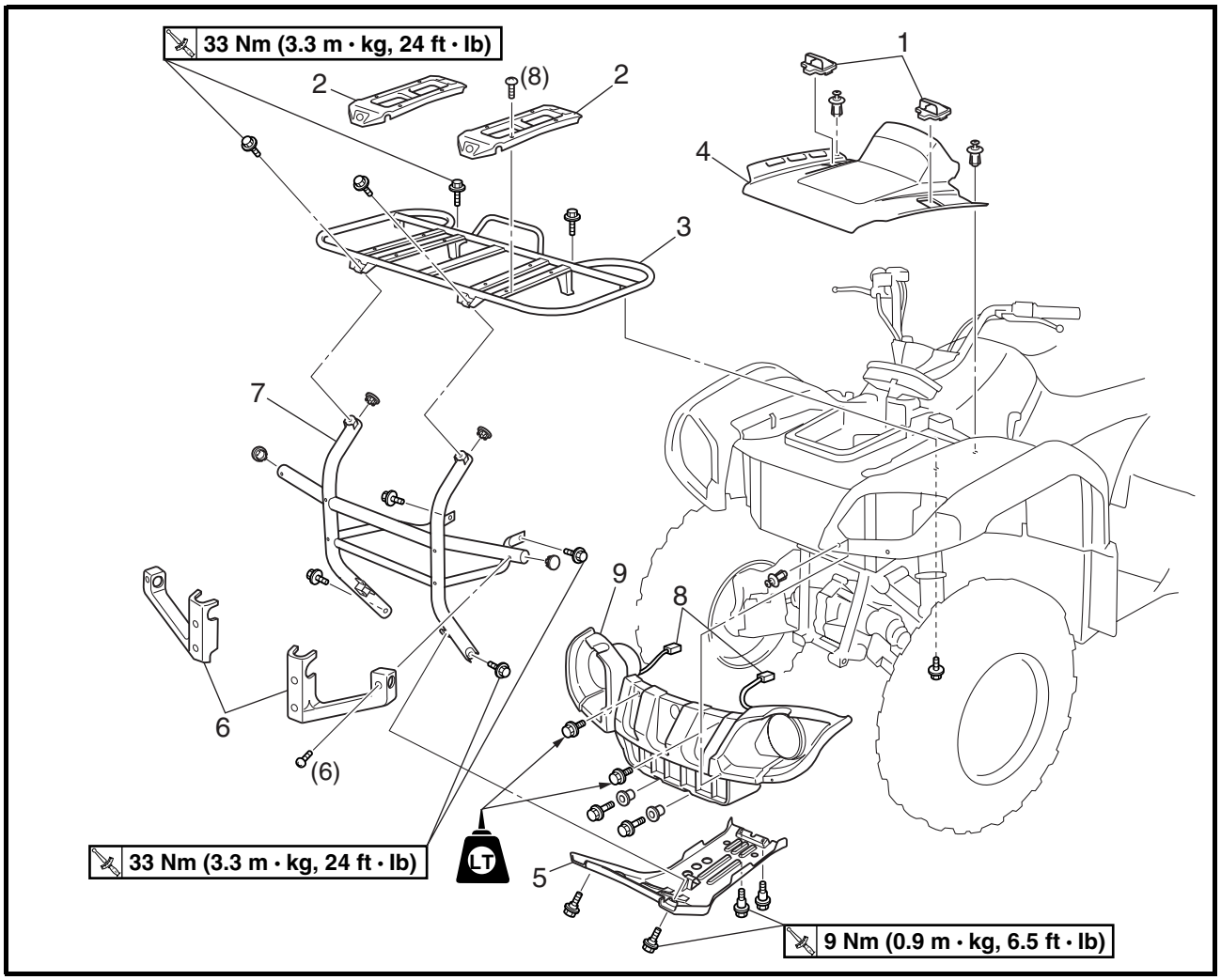

Order	Job name/Part name	Q'ty	Remarks
	Removing the front carrier, front bumper and front grill		Remove the parts in the order below.
	Seat and fuel tank side panels		Refer to "SEAT AND SIDE PANELS" in CHAPTER 3. (Manual No.: 5KM2-AE1)
1	Cap	2	
2	Front carrier cover	2	
3	Front carrier	1	
4	Front fender panel	1	
5	Engine skid plate (front)	1	
6	Front bumper protector	2	
7	Front bumper	1	
8	Headlight coupler	2	Disconnect.
9	Front grill	1	
			For installation, reverse the removal procedure.

FUEL TANK

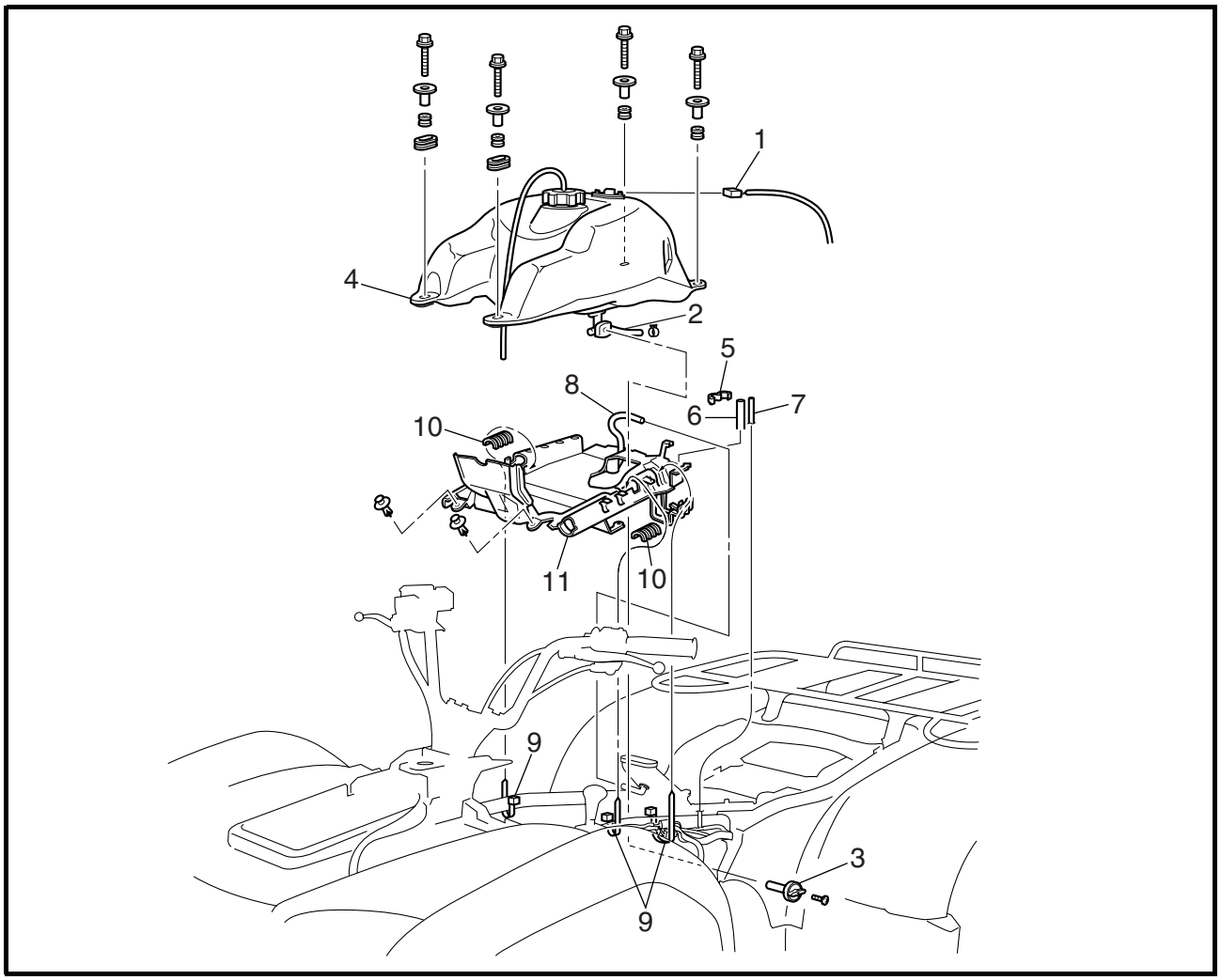

Order	Job name/Part name	Q'ty	Remarks
	Removing the fuel tank		Remove the parts in the order below.
	Seat and side panels		Refer to "SEAT AND SIDE PANELS" in CHAPTER 3. (Manual No.: 5KM2-AE1)
	Fuel tank cover		Refer to "HANDLEBAR COVER, FUEL TANK COVER AND FRONT FENDER" in CHAPTER 3. (Manual No.: 5KM2-AE1)
1	Fuel sender coupler	1	Disconnect.
2	Fuel hose	1	**NOTE:** Before disconnecting the fuel hose, turn the fuel cock to "OFF".
3	Fuel cock lever	1	
4	Fuel tank	1	**NOTE:** When installing the fuel tank, pass the fuel tank breather hose through the hole in the handlebar protector.

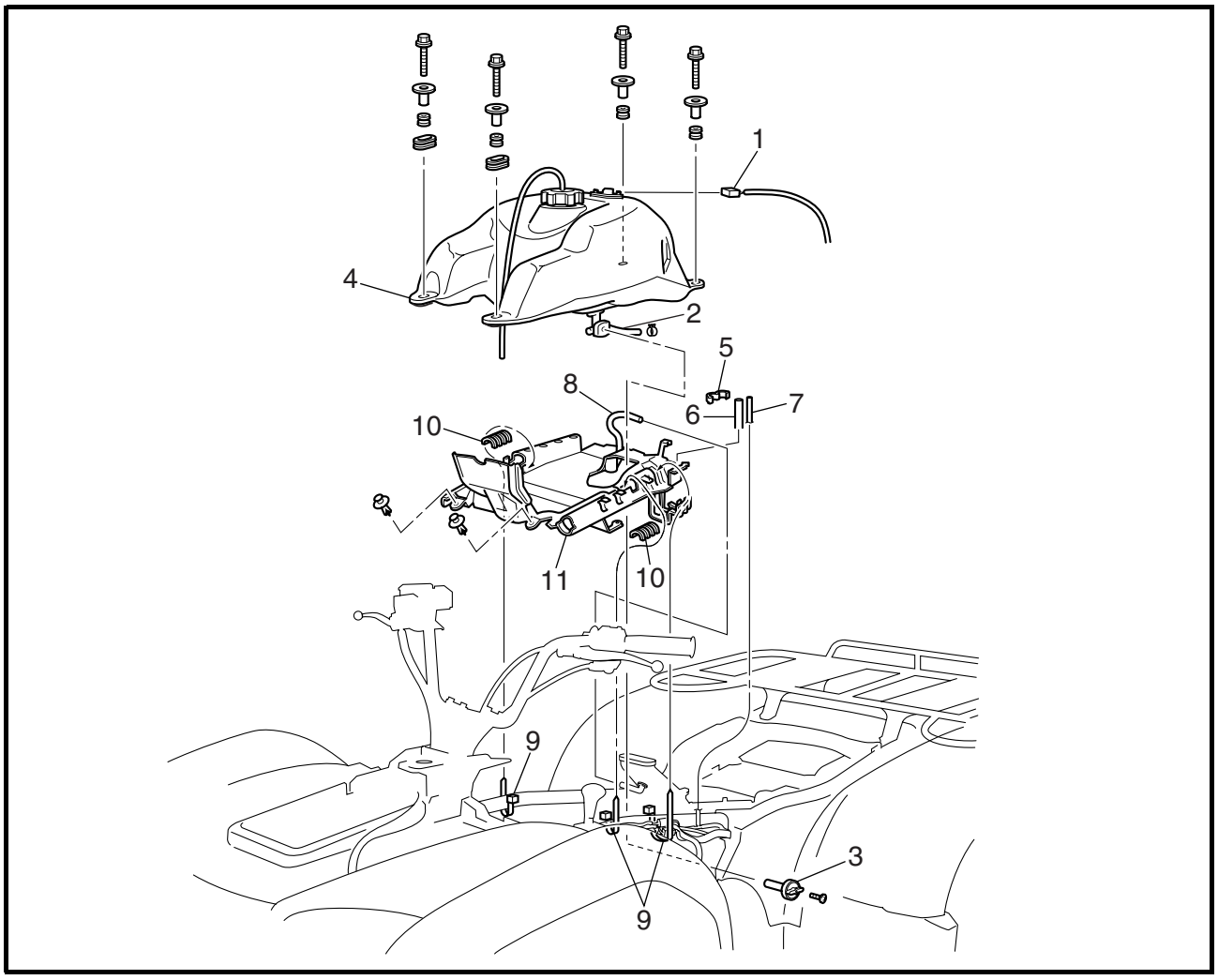

Order	Job name/Part name	Q'ty	Remarks
5	Clamp	1	
6	Vacuum chamber breather hose	1	
7	Differential gear case breather hose	1	
8	Crankcase breather hose	1	
9	Plastic band	3	
10	Bushing	2	
11	Plastic cover	1	
			For installation, reverse the removal procedure.

FOOTREST BOARDS

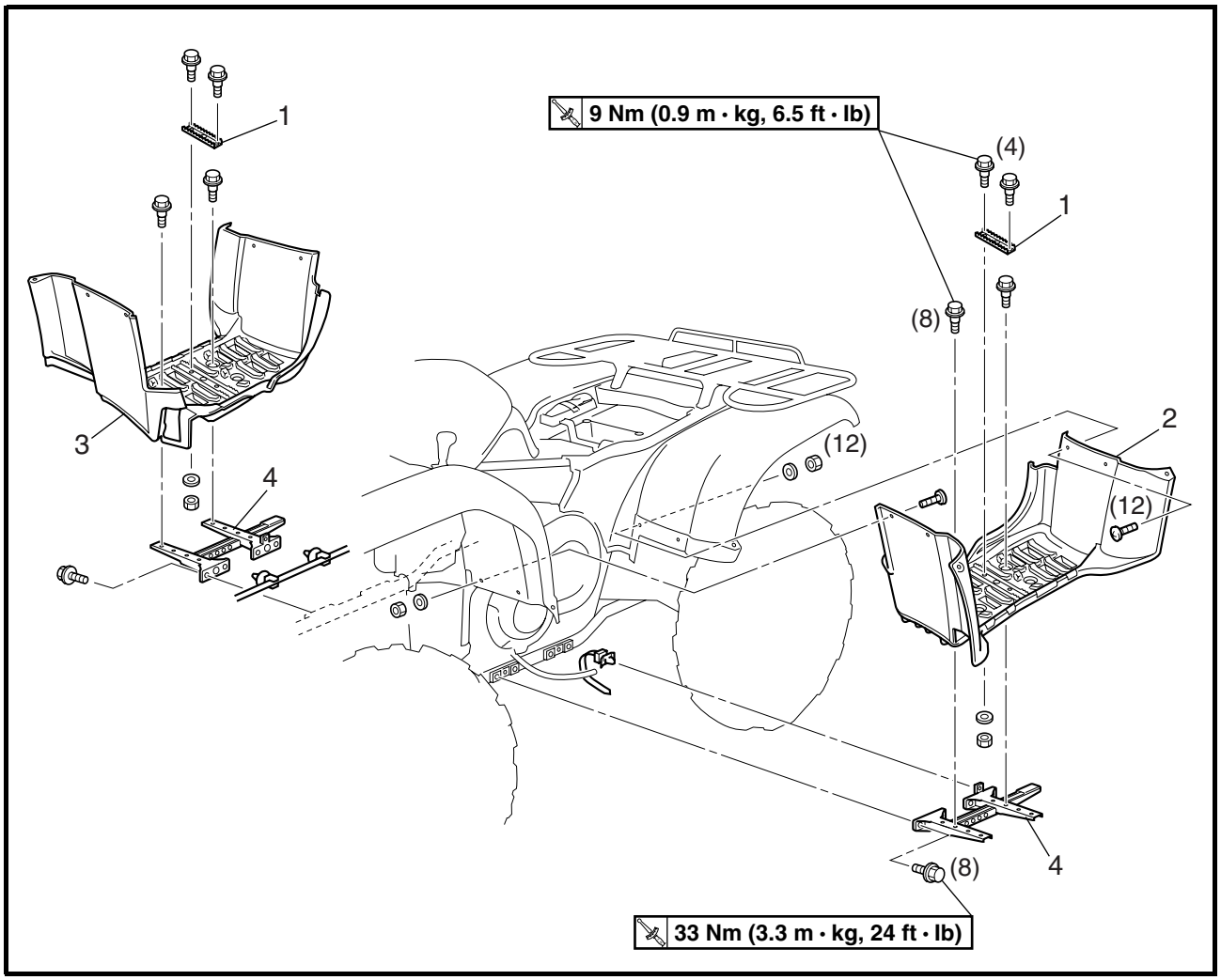

Order	Job name/Part name	Q'ty	Remarks
	Removing the footrest boards		Remove the parts in the order below.
	Fuel tank side panels		Refer to "SEAT AND SIDE PANELS" in CHAPTER 3. (Manual No.: 5KM2-AE1)
1	Footrest	2	
2	Left footrest board	1	
3	Right footrest board	1	
4	Footrest bracket	2	
			For installation, reverse the removal procedure.

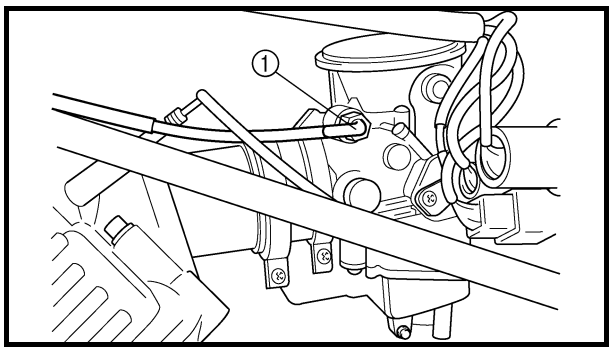

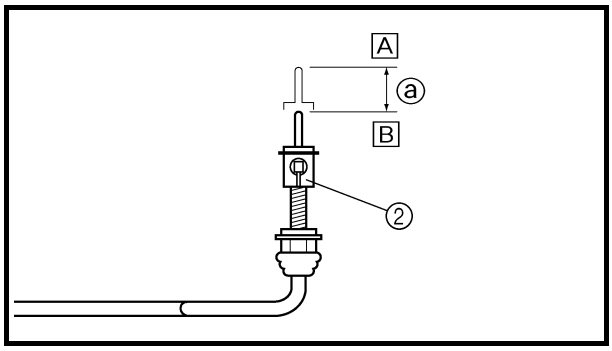

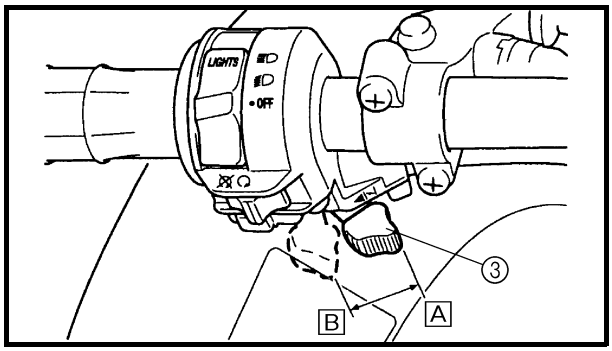

ENGINE

CHECKING THE STARTER CABLE

1.Remove:
- Seat
- Fuel tank side panel (left)

2.Check:
- Starter cable
  Unsmooth operation → Replace.

****

Checking steps:

- Disconnect the starter cable ① from the carburetor body.

NOTE:
Do not remove the starter plunger ② from the starter cable.

- Measure the starter plunger stroke distance ⓐ of the starter lever ③ from the fully closed to fully open positions.

	Starter plunger stroke distance: 15 mm (0.59 in)

A Fully closed position
B Fully open position

- Connect the starter cable to the carburetor.

⚠ WARNING

After checking the cable, turn the handlebar right and left, and make sure that the engine idling speed does not increase.

****

3.Install:
- Fuel tank side panel (left)
- Seat

ENGINE

CAMSHAFT AND CYLINDER HEAD

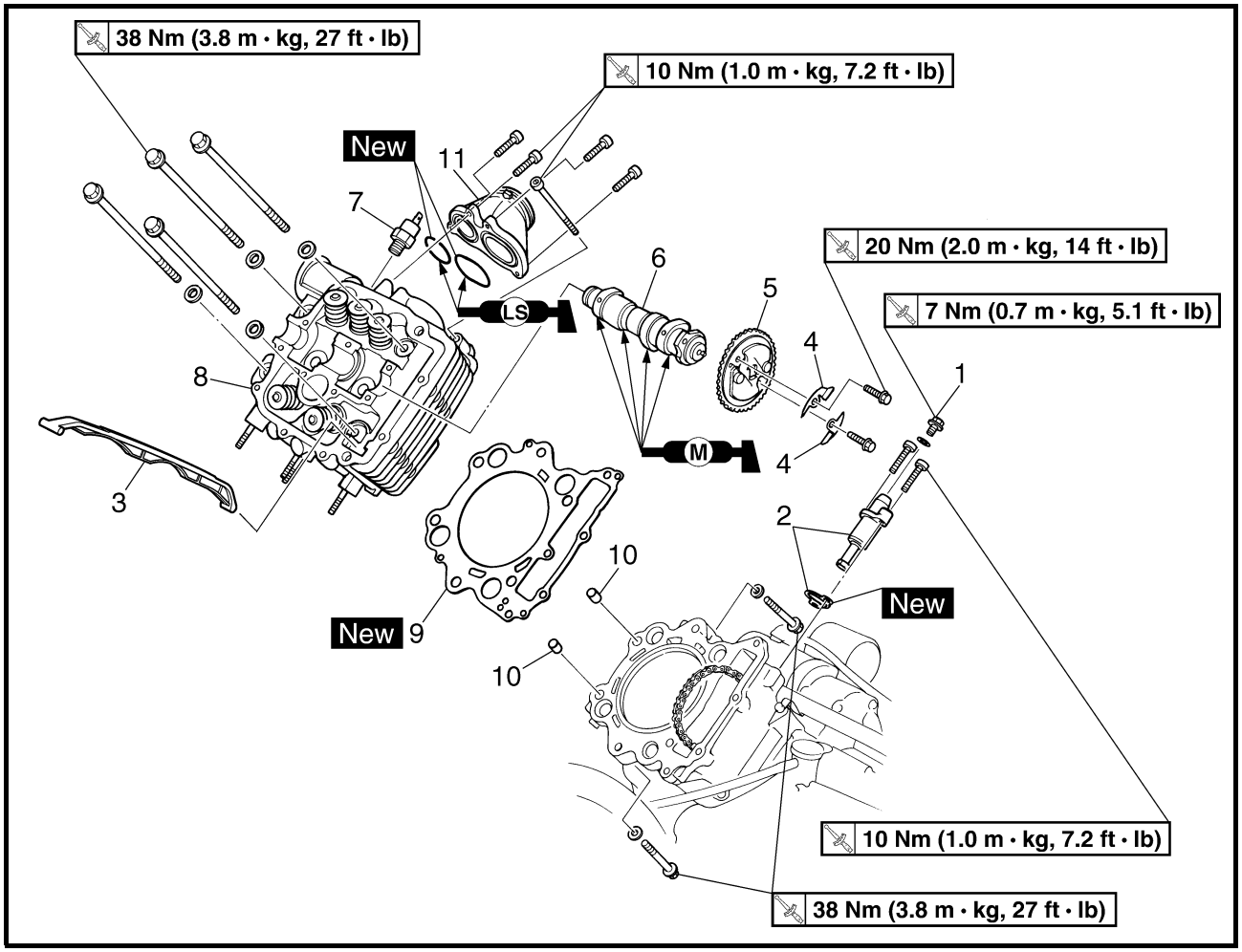

Order	Job name/Part name	Q'ty	Remarks
	Removing the camshaft and cylinder head		Remove the parts in the order below.
	Seat/front fender Fuel tank/plastic covers		Refer to "SEAT, CARRIERS, FENDERS AND FUEL TANK" in CHAPTER 3. (Manual No.: 5KM2-AE1)
	Carburetors		Refer to "CARBURETOR" in CHAPTER 6. (Manual No.: 5KM2-AE1)
	Thermostat		Refer to "THERMOSTAT" in CHAPTER 5. (Manual No.: 5KM2-AE1)
	Thermostat assembly breather hose		Refer to "WATER PUMP" in CHAPTER 5. (Manual No.: 5KM2-AE1)
	Muffler/exhaust pipe		Refer to "ENGINE REMOVAL" in CHAPTER 4. (Manual No.: 5KM2-AE1)
	Thermo switch lead		Refer to "HOSES AND LEADS" in CHAPTER 4. (Manual No.: 5KM2-AE1)

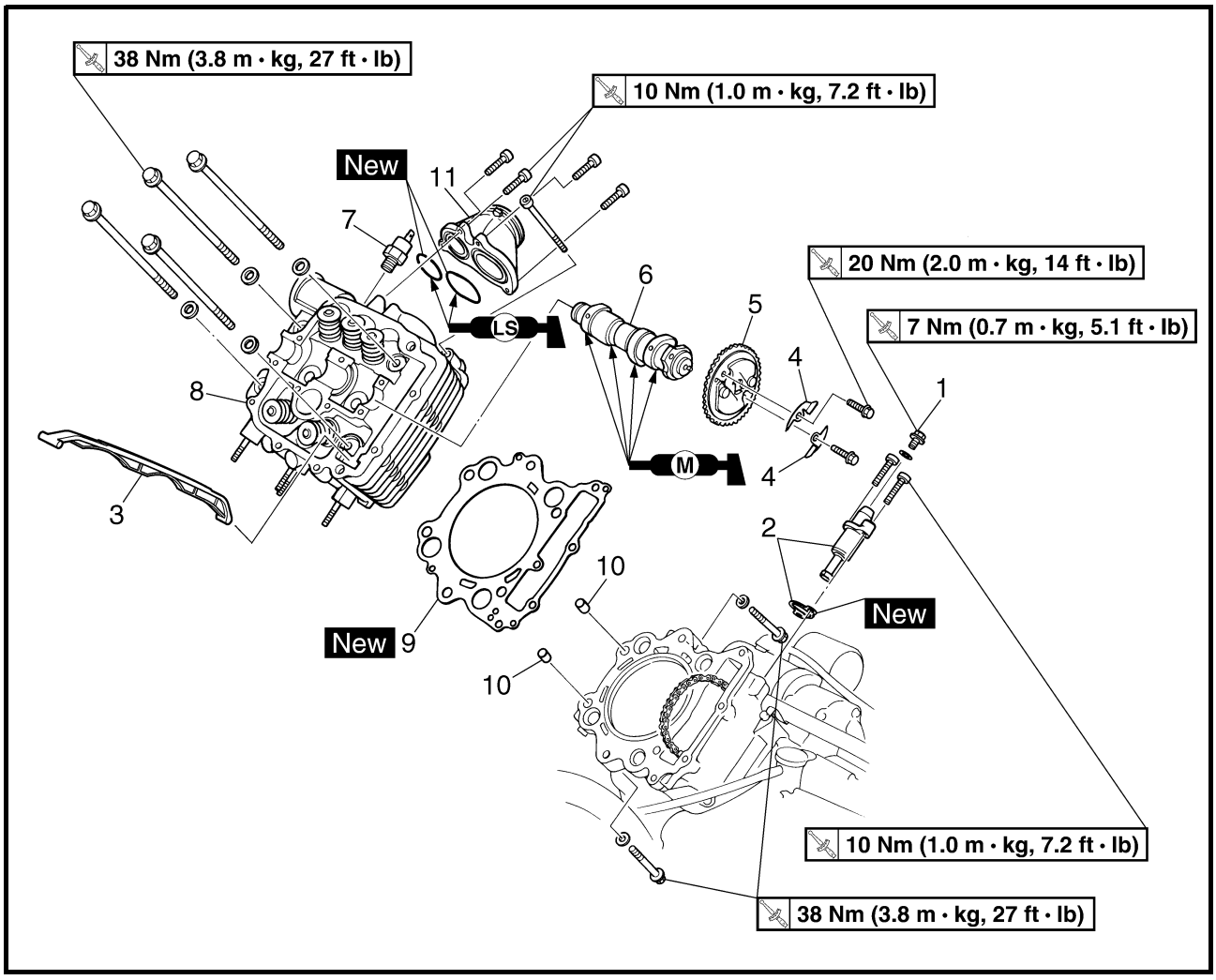

Order	Job name/Part name	Q'ty	Remarks
	Cylinder head cover		Refer to "CYLINDER HEAD COVER" in CHAPTER 4. (Manual No.: 5KM2-AE1)
1	Timing chain tensioner cap bolt	1	
2	Timing chain tensioner/gasket	1/1	Refer to "REMOVING/INSTALLING THE CAMSHAFT AND CYLINDER HEAD" in CHAPTER 4. (Manual No.: 5KM2-AE1)
3	Timing chain guide (exhaust)	1	
4	Decompressor cam guide plate	2	
5	Camshaft sprocket	1	
6	Camshaft	1	
7	Thermo switch	1	
8	Cylinder head	1	
9	Cylinder head gasket	1	
10	Dowel pin	2	
11	Carburetor joint	1	
			For installation, reverse the removal procedure.

RECOIL STARTER AND AC MAGNETO

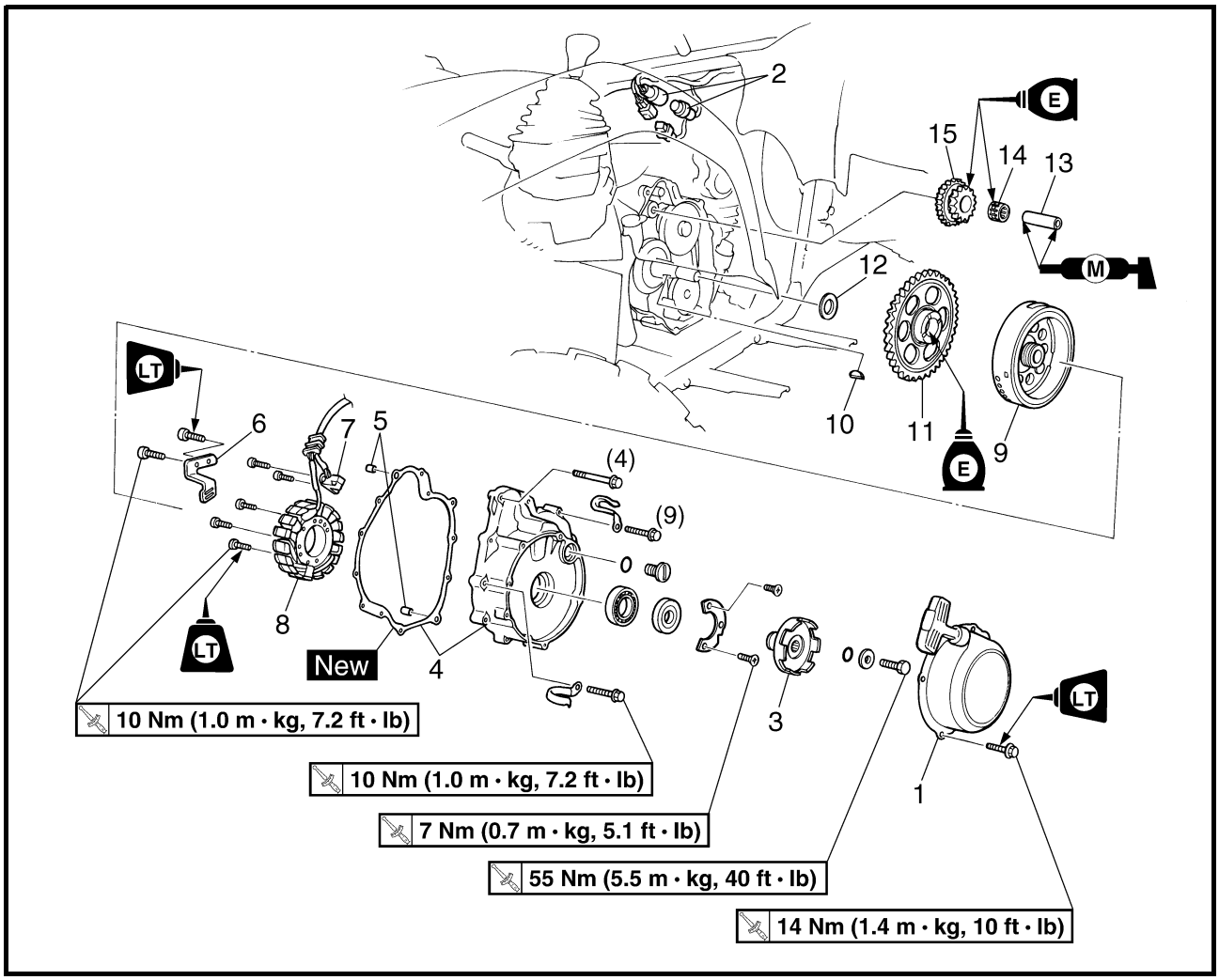

Order	Job name/Part name	Q'ty	Remarks
	Removing the AC magneto		Remove the parts in the order below.
	Engine oil		Drain. Refer to "CHANGING THE ENGINE OIL" in CHAPTER 3. (Manual No.: 5KM2-AE1)
	Coolant		Drain. Refer to "CHANGING THE COOLANT" in CHAPTER 3. (Manual No.: 5KM2-AE1)
	Seat and side panels/engine side cover		Refer to "SEAT AND SIDE PANELS" in CHAPTER 4. (Manual No.: 5KM2-AE1)
	Left footrest board		Refer to "FOOTREST BOARDS".
	Select lever unit		Refer to "SELECT LEVER UNIT AND COOLANT RESERVOIR" in CHAPTER 4. (Manual No.: 5KM2-AE1)
	Water pump assembly		Refer to "WATER PUMP" in CHAPTER 5. (Manual No.: 5KM2-AE1)
1	Recoil starter assembly	1	
2	AC magneto coupler	2	Disconnect.

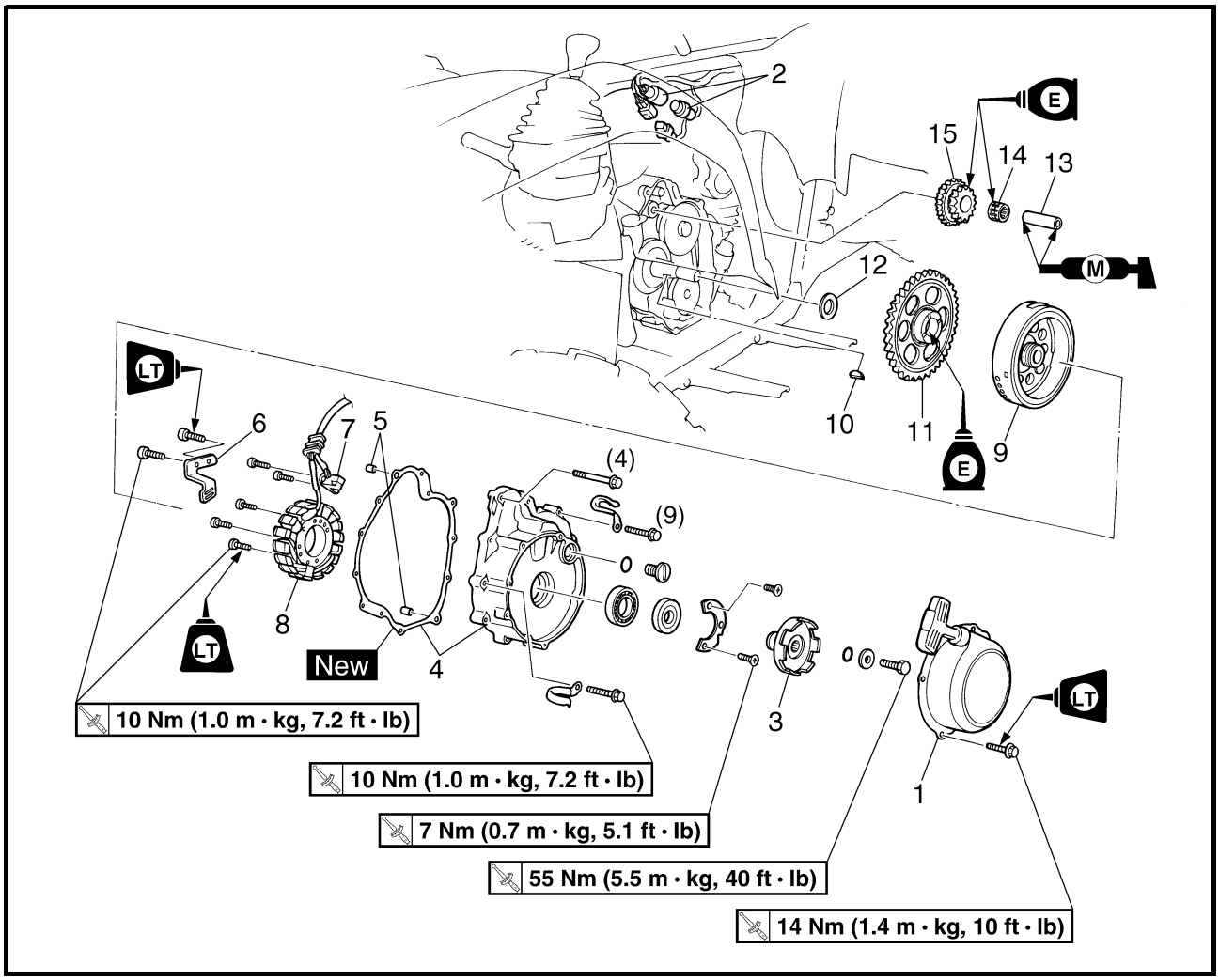

Order	Job name/Part name	Q'ty	Remarks
3	Starter pulley	1	Refer to "REMOVING/INSTALLING THE AC MAGNETO" in CHAPTER 4. (Manual No.: 5KM2-AE1)
4	Crankcase cover (left)/gasket	1/1	
5	Dowel pin	2	
6	Lead holder	1	
7	Pickup coil	1	
8	Starter assembly	1	
9	CDI rotor	1	Refer to "REMOVING/INSTALLING THE AC MAGNETO" in CHAPTER 4. (Manual No.: 5KM2-AE1)
10	Woodruff key	1	
11	Starter wheel gear	1	
12	Washer	1	
13	Starter idle gear shaft	1	
14	Bearing	1	
15	Starter idle gear	1	
			For installation, reverse the removal procedure.

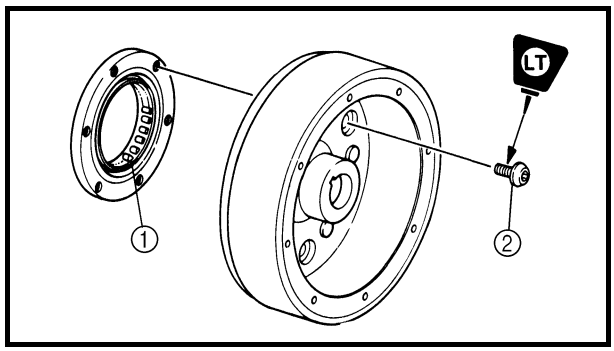

CHECKING THE STARTER CLUTCH

1.Check:
- Starter clutch ①
  Cracks/damage → Replace.
- Bolts ② (starter clutch)
  Loose → Replace with new ones, and clinch the end of the bolts.

NOTE:
The arrow mark on the starter clutch must face inward, away from the CDI rotor.

Bolts (starter clutch):
30 Nm (3.0 m • kg, 22 ft • lb)
LOCTITE®

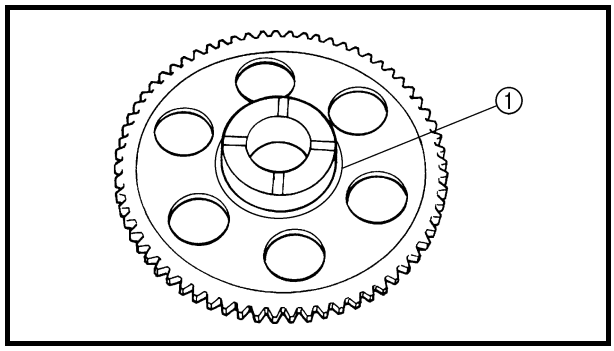

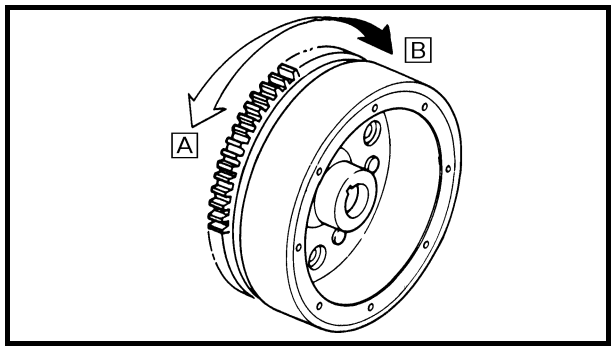

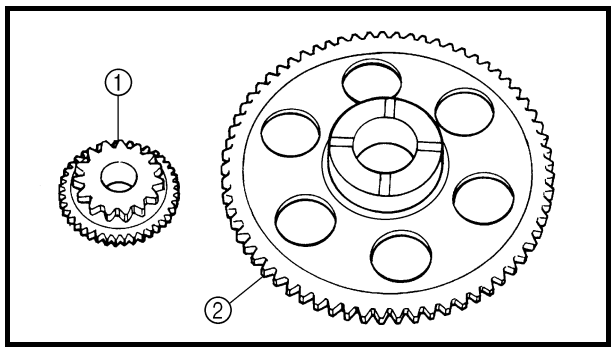

****

Checking steps:
- Install the starter wheel gear onto the starter clutch, and hold the starter clutch.

NOTE:
Install the starter wheel gear with the groove ① facing the CDI rotor.

- Turn the starter wheel gear counterclockwise [A] to check that the starter clutch and wheel gear engage.
  If the starter clutch and wheel gear do not engaged, replace the starter clutch.
- Turn the starter wheel gear clockwise [B] to check the starter wheel gear for smooth operation.
  If operation is not smooth, replace the starter clutch.

****

2.Check:
- Gear teeth (starter idle) ①
- Gear teeth (starter wheel) ②
  Burrs/clips/roughness/wear → Replace.

3.Check:
- Starter wheel gear
  (contacting surface)
  Damage/pitting/wear → Replace.

MIDDLE GEAR

MIDDLE DRIVEN SHAFT

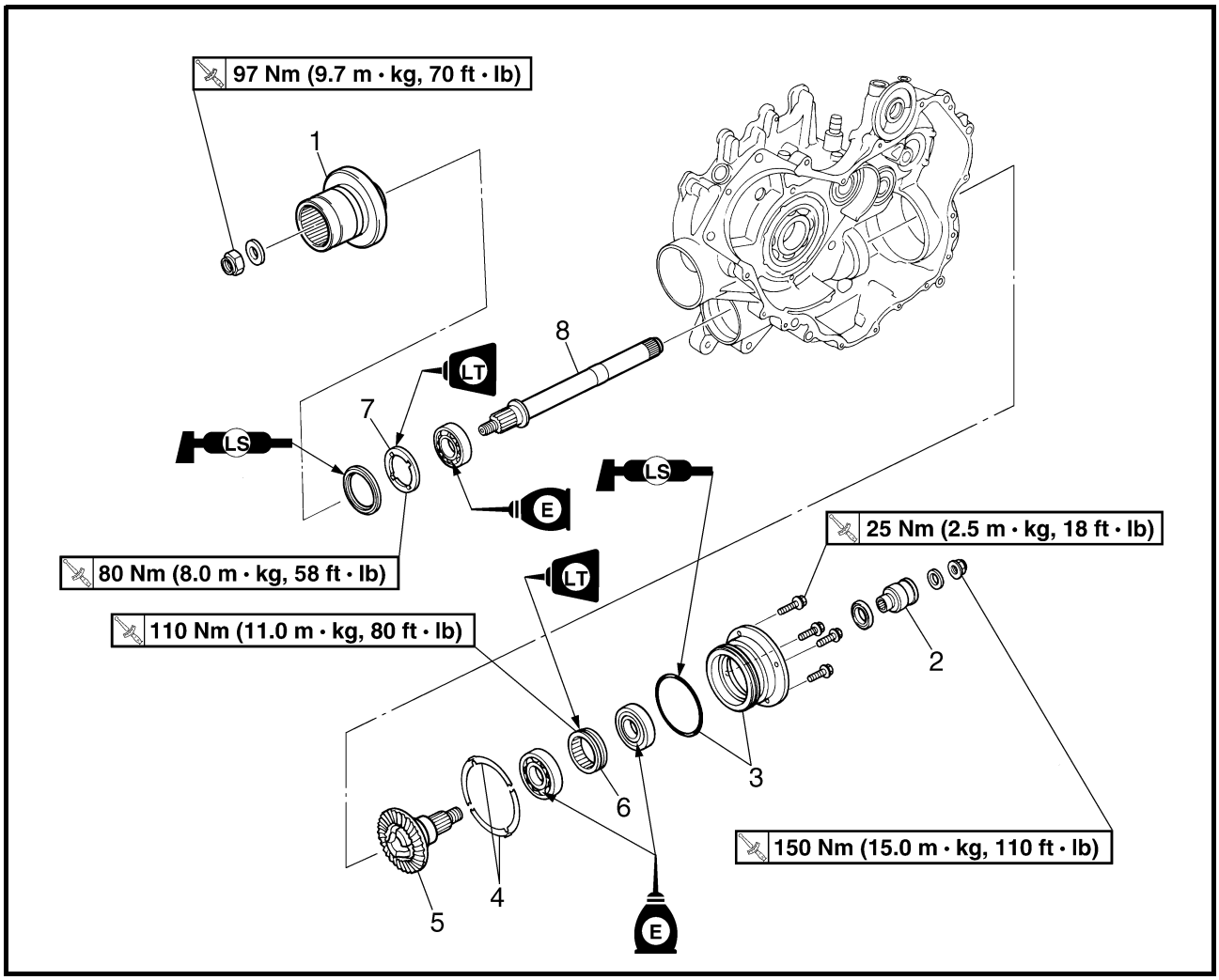

Order	Job name/Part name	Q'ty	Remarks
	Disassembling the middle driven shaft		Remove the parts in the order below.
	Crankcase separation		Refer to "CRANKCASE" in CHAPTER 4. (Manual No.: 5KM2-AE1)
1	Front drive shaft coupling	1	Refer to "INSTALLING/REMOVING THE MIDDLE DRIVEN SHAFT".
2	Coupling gear	1	
3	Bearing housing/O-ring	1/1	
4	Shim		Refer to "MIDDLE DRIVE AND DRIVEN GEAR SHIM SELECTION". (Manual No.: 5KM2-AE1)
5	Middle driven pinion gear	1	Refer to "REMOVING/INSTALLING THE MIDDLE DRIVEN SHAFT".
6	Bearing retainer	1	

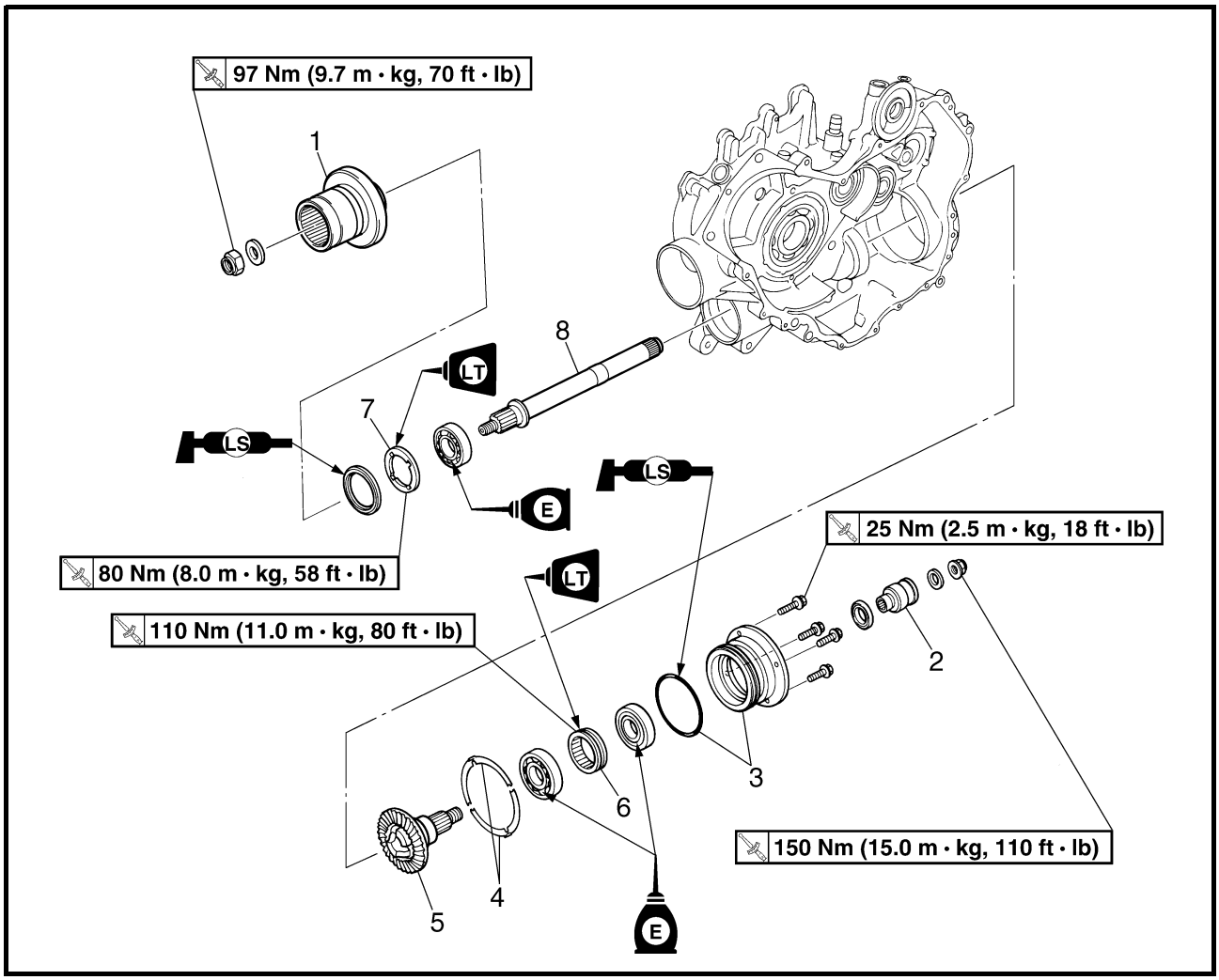

Order	Job name/Part name	Q'ty	Remarks
7	Bearing retainer	1	
8	Middle driven shaft	1	
			For installation, reverse the removal procedure.

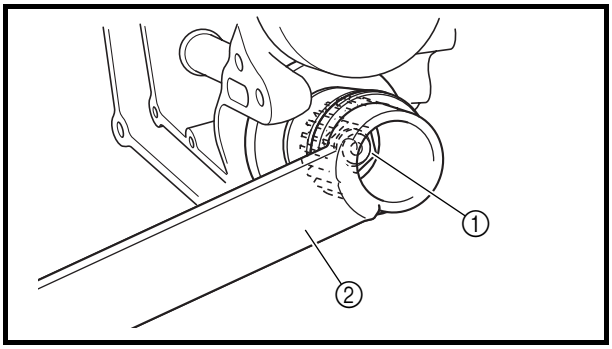

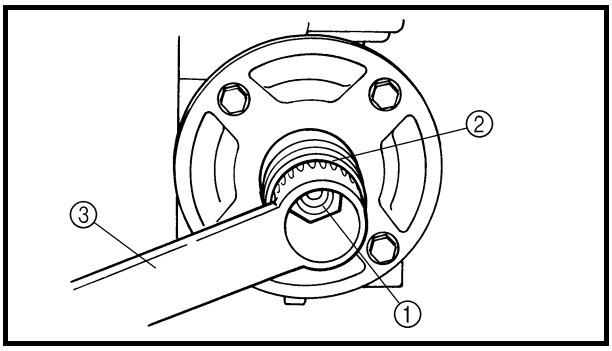

REMOVING THE MIDDLE DRIVEN SHAFT

1.Remove:
- Nut ①
- Washer
- Front drive shaft coupling

NOTE:
Use the coupling gear holding tool ② to hold the front drive shaft coupling.

Coupling gear holding tool:
P/N. YM-01486, 90890-01486

2.Remove:
- Nut ①
- Washer
- Coupling gear ②

NOTE:
Use the coupling gear/middle shaft tool ③ to hold the coupling gear.

Coupling gear/middle shaft tool
P/N. YM-01230, 90890-01229

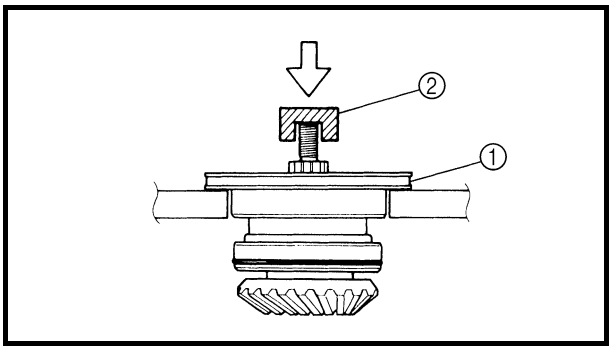

3.Remove:
- Bearing housing assembly ①

****

Removal steps:
- Clean the outside of the middle driven shaft.
- Place the middle driven shaft onto a hydraulic press.

CAUTION:
- **Never directly press the shaft end with a hydraulic press, this will result in damage to the shaft thread.**
- **Install the suitable socket ② on the shaft end to protect the thread from damage.**

- Press the shaft end and remove the bearing housing.

****

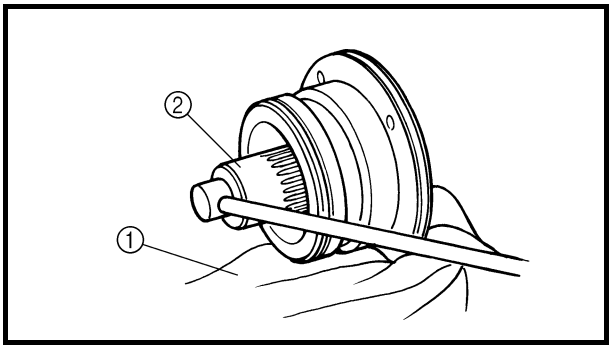

4.Remove:
- Bearing retainer
- Bearing

****

Removal steps:
- Place a rag ① in the vise.
- Secure the bearing housing edge in the vise.
- Attach the bearing retainer wrench ②.

	Bearing retainer wrench: **P/N. YM-04128, 90890-04128**

CAUTION:

The middle driven shaft bearing retainer has left-handed threads. To loosen the retainer, turn it clockwise.

- Remove the bearing retainer and bearing.

****

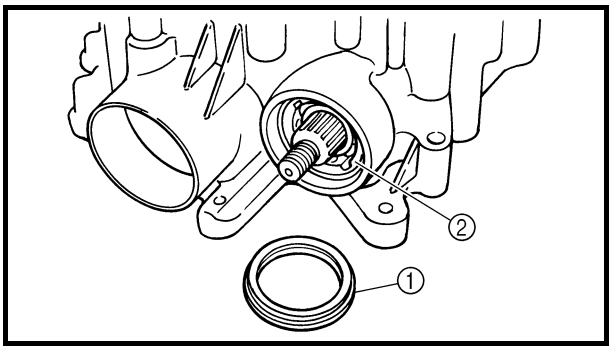

5.Remove:
- Front drive shaft coupling
- Oil seal ①
- Bearing retainer ②
- Bearing

NOTE:

Attach the ring nut wrench ③.

	Ring nut wrench: **P/N. YM-38404, 90890-01430**

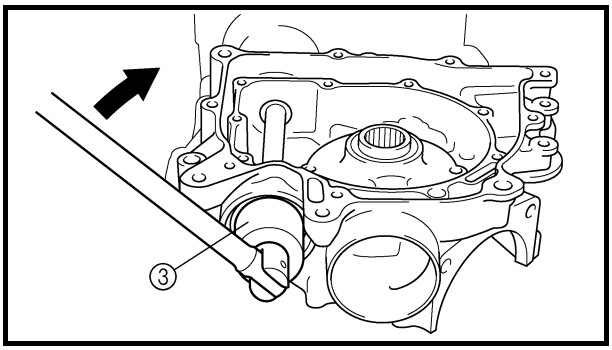

CAUTION:

The middle driven shaft bearing retainer has left-handed threads. To loosen the retainer, turn it clockwise.

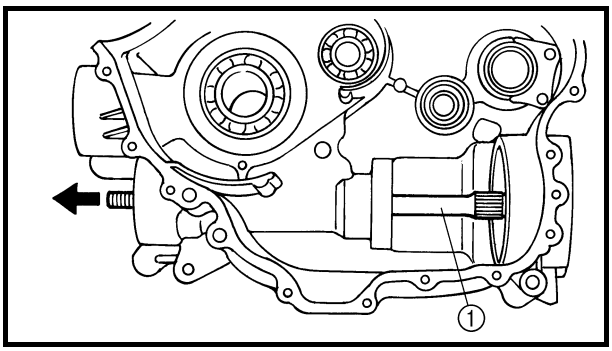

6.Remove:
- Middle drive shaft ①
  (with bearing)

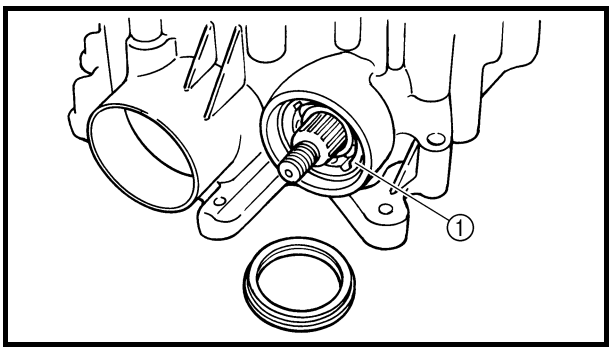

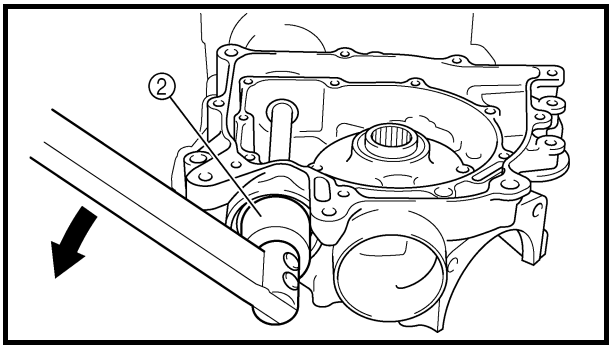

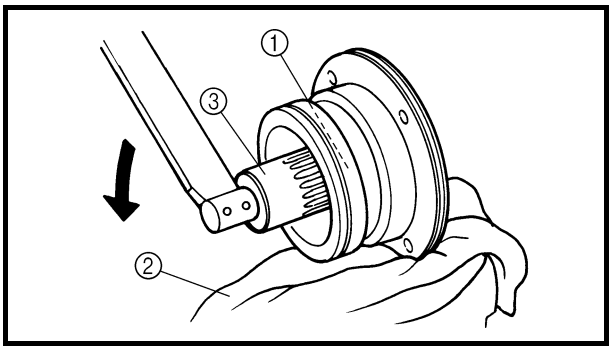

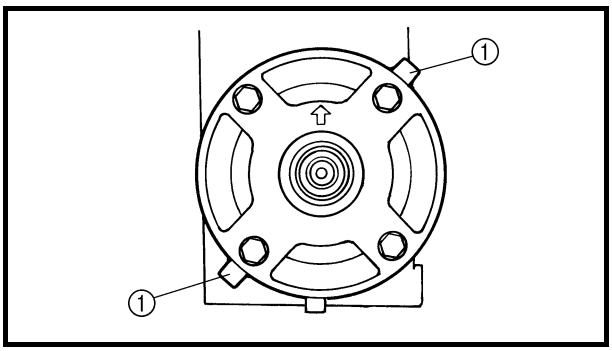

INSTALLING THE MIDDLE DRIVEN SHAFT

1.Install:

- Bearing retainer ① LT

	80 Nm (8.0 m • kg, 58 ft • lb)

NOTE:

Attach the ring nut wrench ②.

	Ring nut wrench: **P/N. YM-38404, 90890-01430**

CAUTION:

The middle driven shaft bearing retainer has left-handed threads. To tighten the retainer, turn it counterclockwise.

2.Install:

- Bearing retainer ① LT

****

Installation steps:

- Place a rag ② in the vise.
- Secure the bearing housing edge in the vise.
- Attach the bearing retainer wrench ③.

	Bearing retainer wrench: **P/N. YM-04128, 90890-04128**

- Tighten the bearing retainer.

CAUTION:

The middle driven shaft bearing retainer has left-handed threads. To tighten the retainer, turn it counterclockwise.

	Bearing retainer: **110 Nm (11.0 m • kg, 80 ft • lb)**

****

3.Install:

- Shims ①
- Bearing housing

NOTE:

Install the shims so that the tabs are positioned as shown in the illustration.

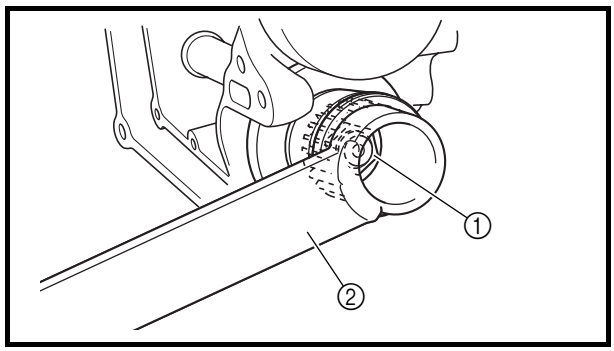

4.Install:
- Front drive shaft coupling
- Washer
- Nut ① LT

	97 Nm (9.7 m • kg, 70 ft • lb)

NOTE:
Use the coupling gear holding tool ② to hold the front drive shaft coupling.

	Coupling gear holding tool: **P/N. YM-01486, 90890-01486**

DRIVE TRAIN

FRONT CONSTANT VELOCITY JOINTS AND DIFFERENTIAL GEAR

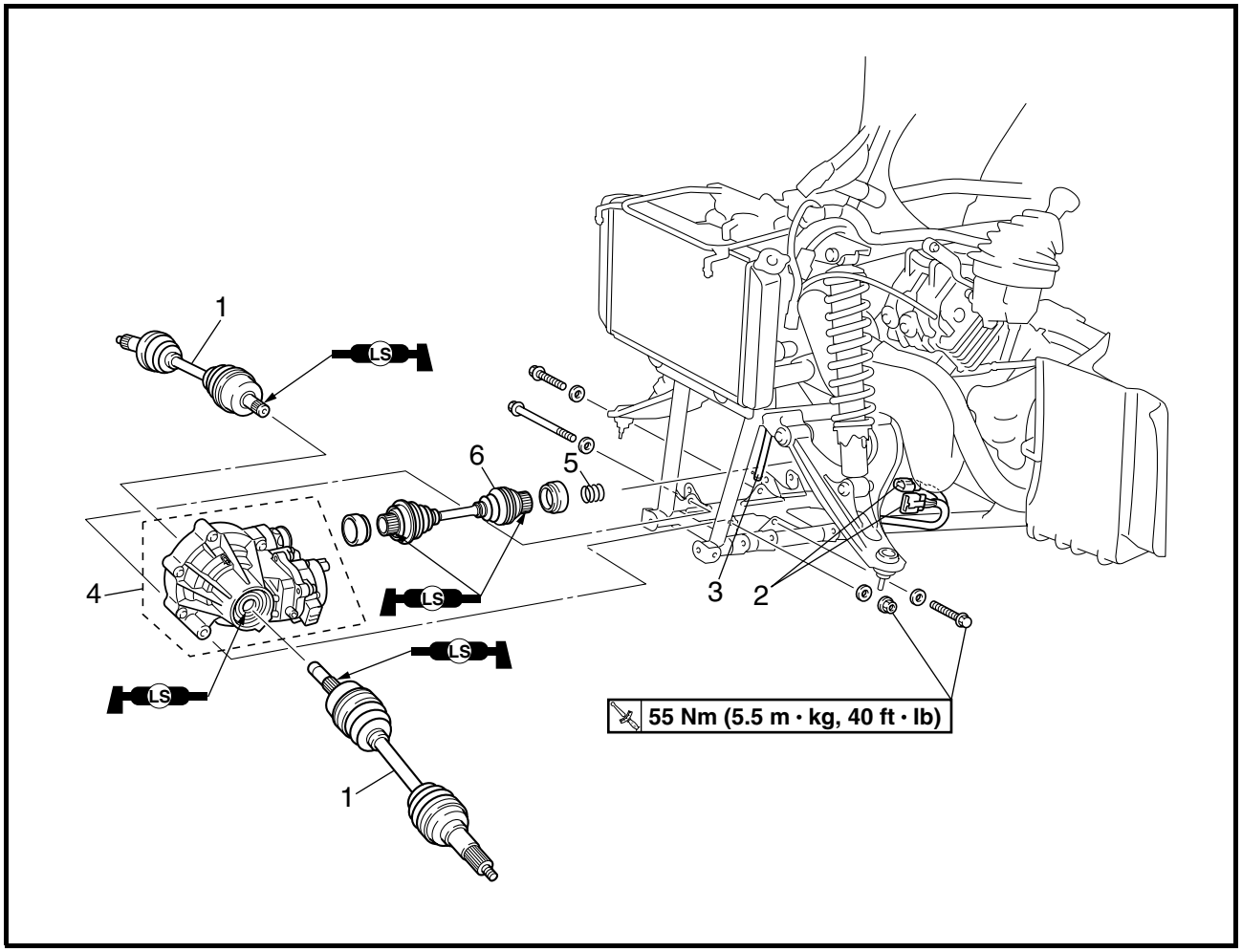

Order	Job name/Part name	Q'ty	Remarks
	Removing the front constant velocity joint and differential gear		Remove the parts in the order below.
	Engine skid plate (front)		Refer to "SEAT, CARRIERS, FENDERS AND FUEL TANK" in CHAPTER 3. (Manual No.: 5KM2-AE1)
	Front fender		
	Differential gear oil		Drain.
	Steering knuckle		Refer to "STEERING SYSTEM" in CHAPTER 8. (Manual No.: 5KM2-AE1)
	Front arms (lower)		Refer to "FRONT ARMS AND FRONT SHOCK ABSORBER" in CHAPTER 8. (Manual No.: 5KM2-AE1)
	Brake master cylinder cover		Refer to "FRONT AND REAR BRAKES" in CHAPTER 8. (Manual No.: 5KM2-AE1)
1	Constant velocity joint	2	
2	Gear motor coupler/on-command four-wheel drive switch and differential gear lock switch coupler	1/1	Disconnect.

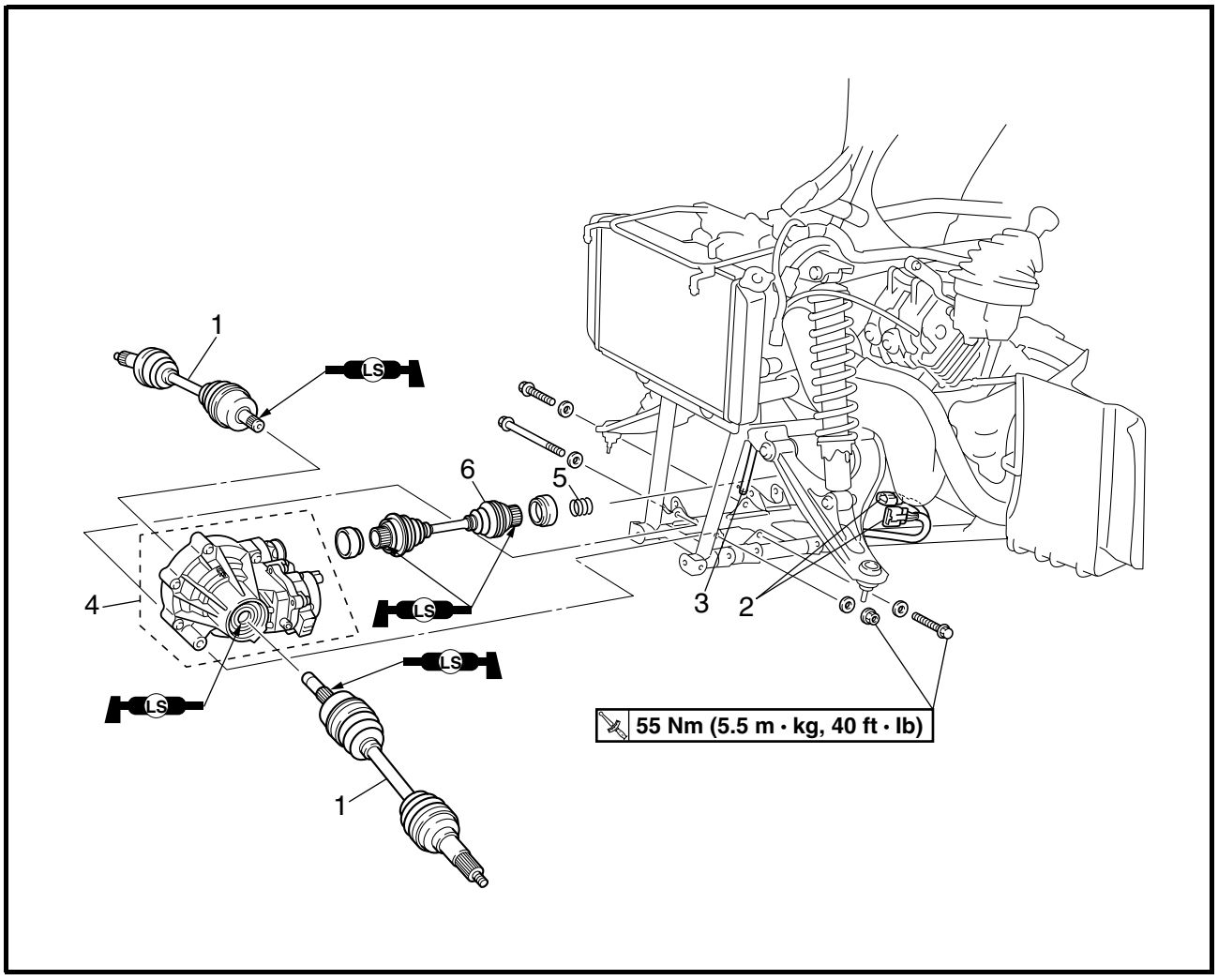

Order	Job name/Part name	Q'ty	Remarks
3	Differential gear case breather hose	1	Disconnect.
4	Differential gear	1	
5	Compression spring	1	
6	Drive shaft assembly	1	
			For installation, reverse the removal procedure.

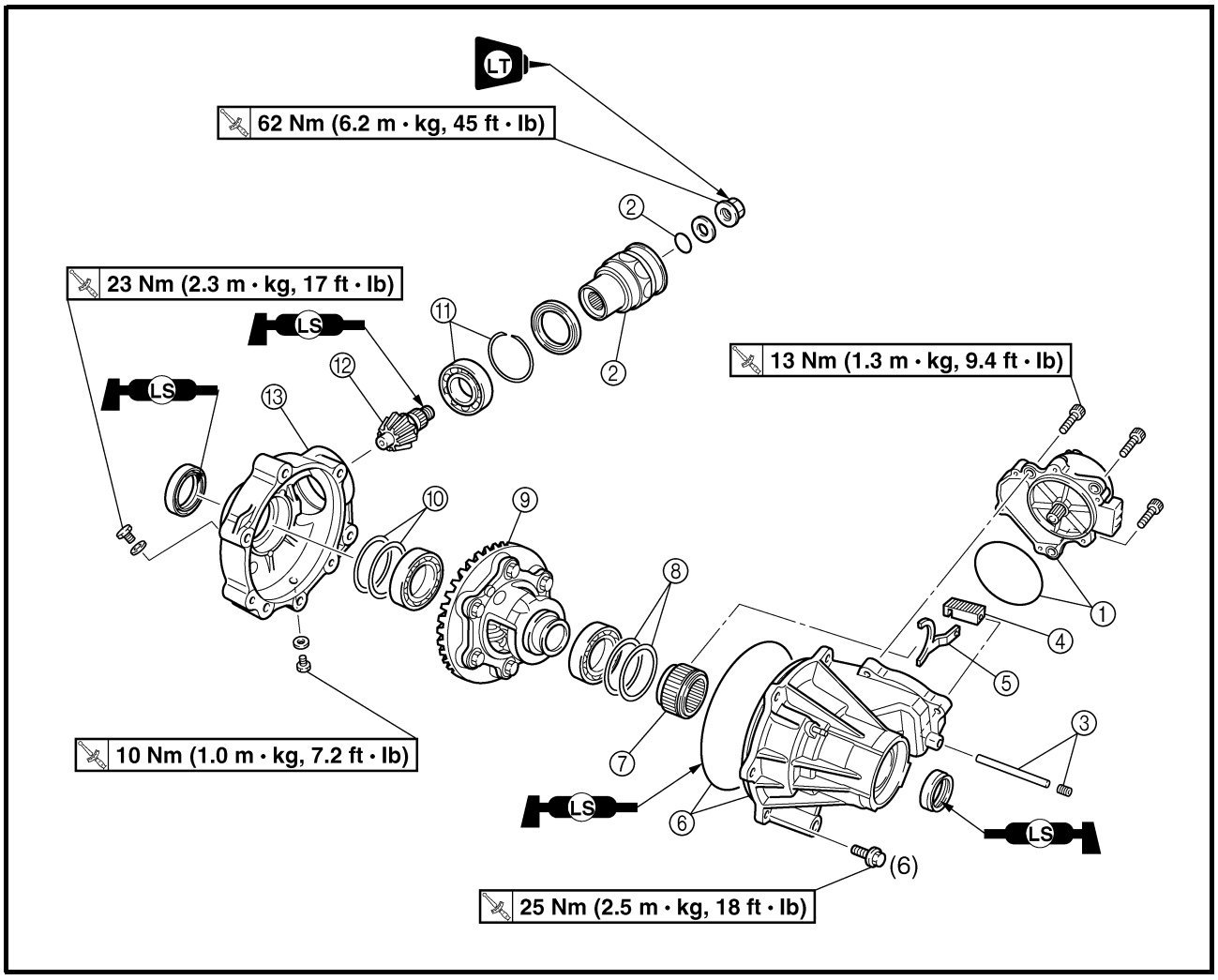

Order	Job name/Part name	Q'ty	Remarks
	Disassembling the differential gear		Remove the parts in the order below.
①	Gear motor/O-ring	1/1	**NOTE:** Do not disassemble the gear motor or remove the pinion gear.
②	Coupling gear/O-ring	1/1	Refer to "DISASSEMBLING/ASSEMBLING THE DIFFERENTIAL GEAR".
③	Sttoper bolt/shaft	1/1	
④	Shift fork sliding gear	1	
⑤	Shift fork	1	
⑥	Differential gear case cover	1	
⑦	Drive clutch	1	
⑧	Shim (left)		

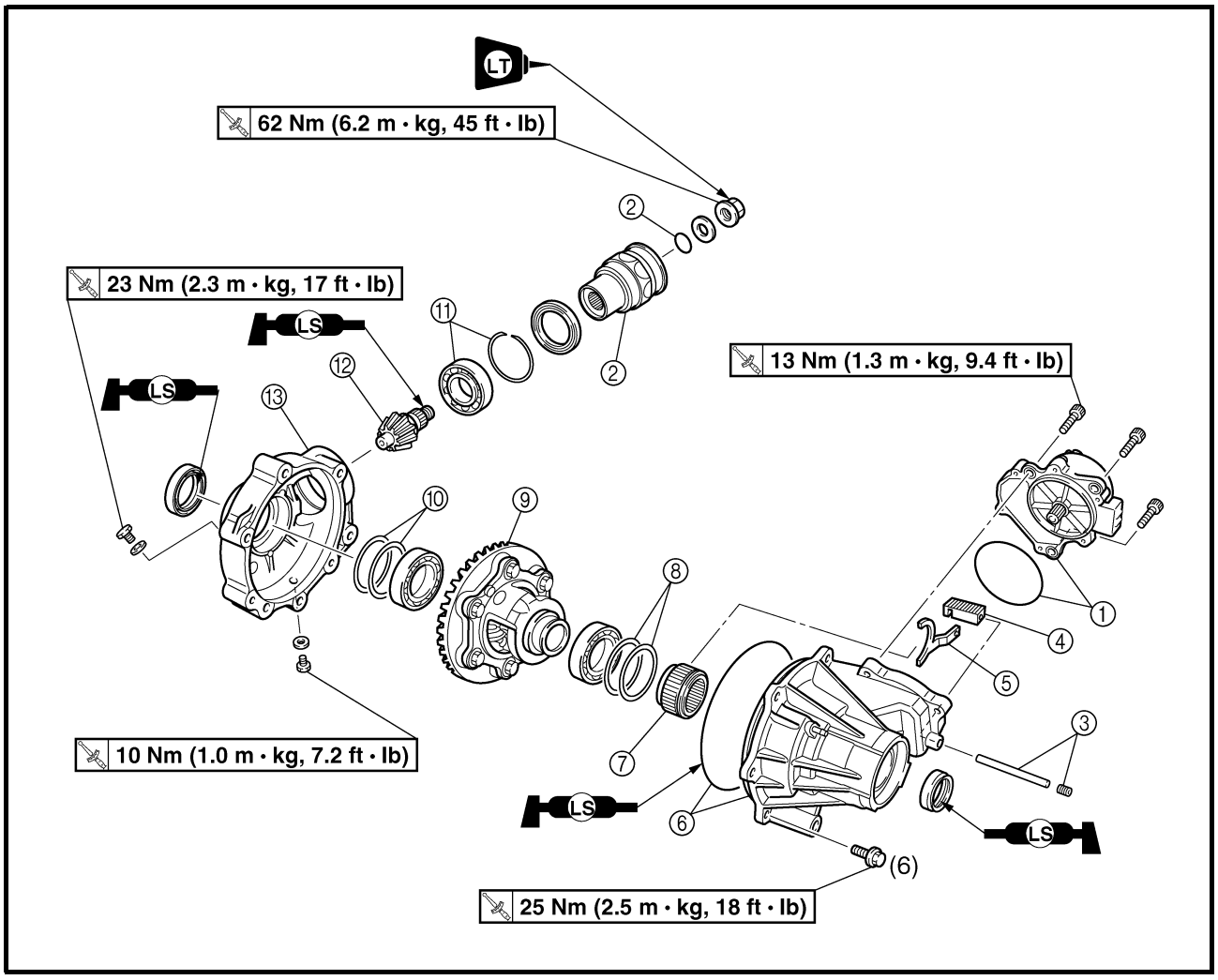

Order	Job name/Part name	Q'ty	Remarks
⑨	Differential gear assembly	1	
⑩	Shim (right)		
⑪	Circlip/bearing	1/1	
⑫	Drive pinion gear	1	
⑬	Differential gear case	1	
			For assembly, reverse the disassembly procedure.

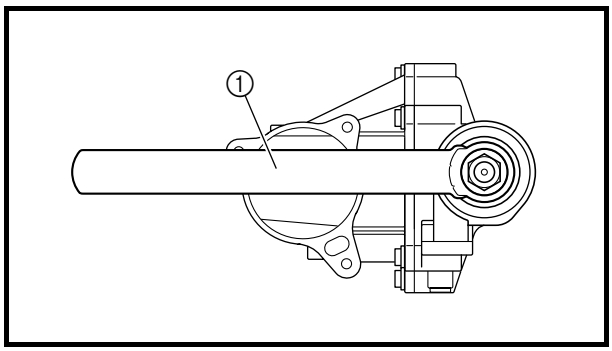

DISASSEMBLING THE DIFFERENTIAL GEAR

1.Remove:
- Coupling gear
  Use a coupling gear holding tool ①.

	Coupling gear holding tool: P/N. YM-01486, 90890-01486

CHECKING THE DIFFERENTIAL GEAR

1.Check:
- Gear teeth
  Pitting/galling/wear → Replace drive pinion gear and ring gear as a set.
- Bearing
  Pitting/damage → Replace.
- Oil seal
- O-ring
  Damage → Replace.

2.Check:
- Drive shaft splines
- Front drive gear splines
  Wear/damage → Replace.
- Spring
  Fatigue → Replace.
  Move the spring up and down.

3.Check:
- Dust boots
  Cracks/damage → Replace the front drive shaft assembly.

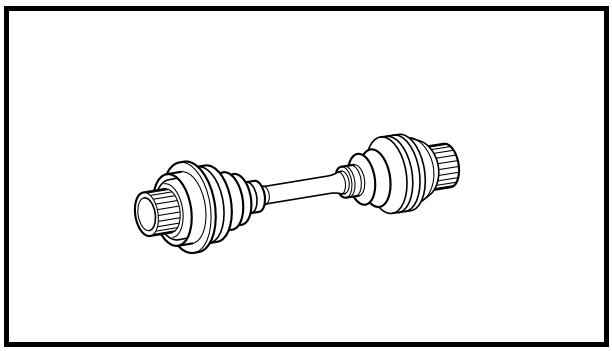

4.Check:
- Front drive shaft
  Bends → Replace the front drive shaft assembly.

⚠ WARNING

Do not attempt to straighten a bent shaft; this may dangerously weaken the shaft.

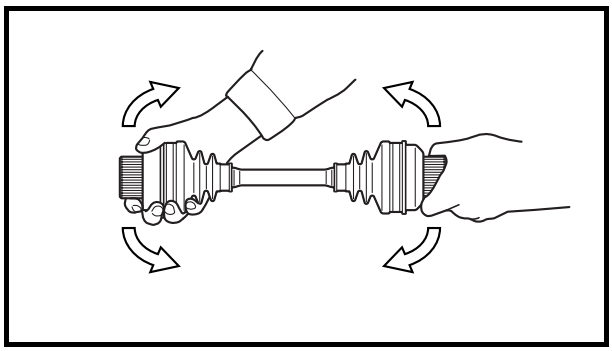

5.Check:
- Front drive shaft assembly operation
  Unsmooth operation → Replace the front drive shaft assembly.

ASSEMBLING THE DIFFERENTIAL GEAR

1.Measure:
- Gear lash
  Refer to "MEASURING AND ADJUSTING THE DIFFERENTIAL GEAR LASH". in CHAPTER 7. (Manual No.: 5KM2-AE1)

2.Install:
- Gear motor

****

Installation steps:

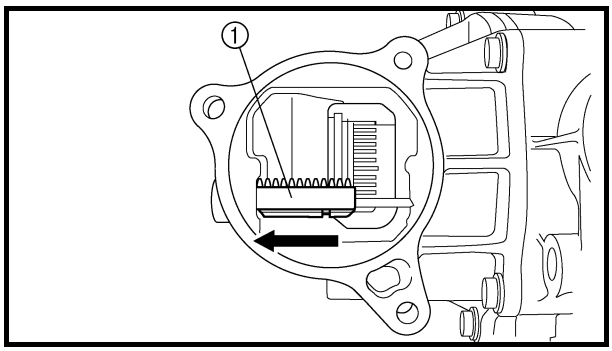

- Slide the shift fork sliding gear ①, which is installed to the differential gear, to the left to put it into the 2WD mode.
- Connect two C size batteries to the gear motor terminal ② to operate the pinion gear ③. Operate the pinion gear until the paint mark ④ on the gear is aligned with the paint mark ⑤ on the gear motor case.

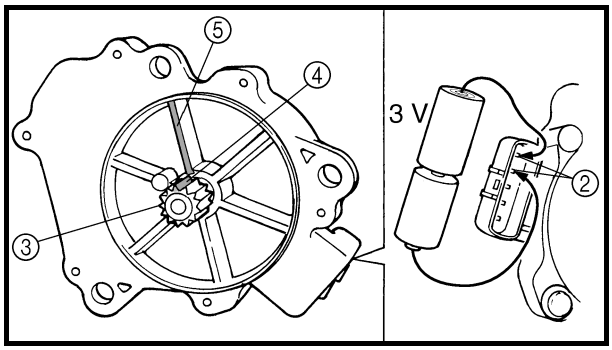

CAUTION:

Do not use a 12 V battery to operate the pinion gear.

- Insert 8 mm bolts ⑥ into the gear motor ⑦ and use them as a guide to set the motor on the differential gear assembly ⑧ so that the shift fork sliding gear ⑨ does not move.

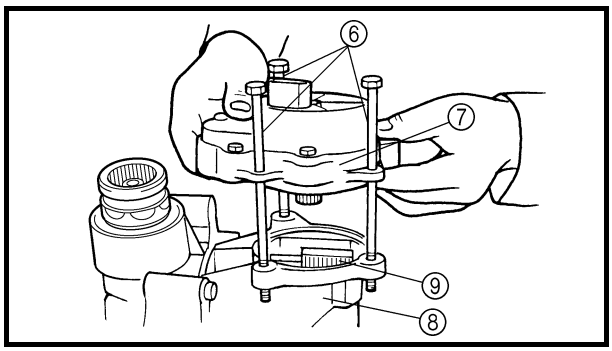

CAUTION:

If the position of the shift fork sliding gear is moved, the position of the differential gear and the indicator light display may differ, and the 2WD or differential lock mode may not be activated.

- Remove the 8 mm bolts, and then install the motor with the gear motor bolts.

	Bolts (gear motor) **13 Nm (1.3 m • kg, 9.4 ft • lb)**

****

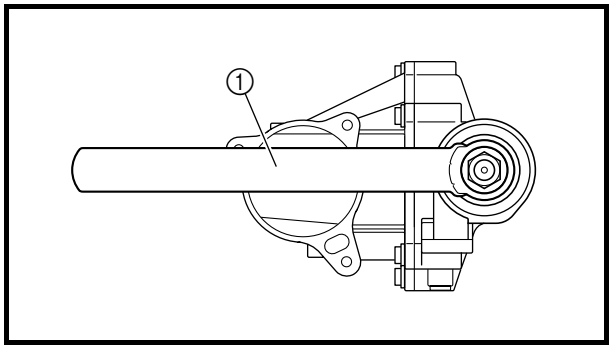

3.Install:
- Coupling gear
- O-ring
- Washer
- Nut LT 62 Nm (6.2 m • kg, 45 ft • lb)

  Use a coupling gear holding tool ①.

	Coupling gear holding tool: P/N. YM-01486, 90890-01486

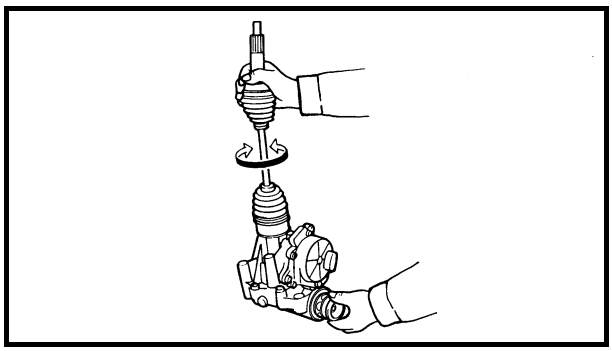

4.Check:
- Differential gear operation

  Unsmooth operation → Replace the differential gear assembly.

  Insert the double off-set joint into the differential gear, and then turn the gear back and forth.

CHASSIS

FRONT WHEELS AND BRAKE DISCS

FRONT WHEELS

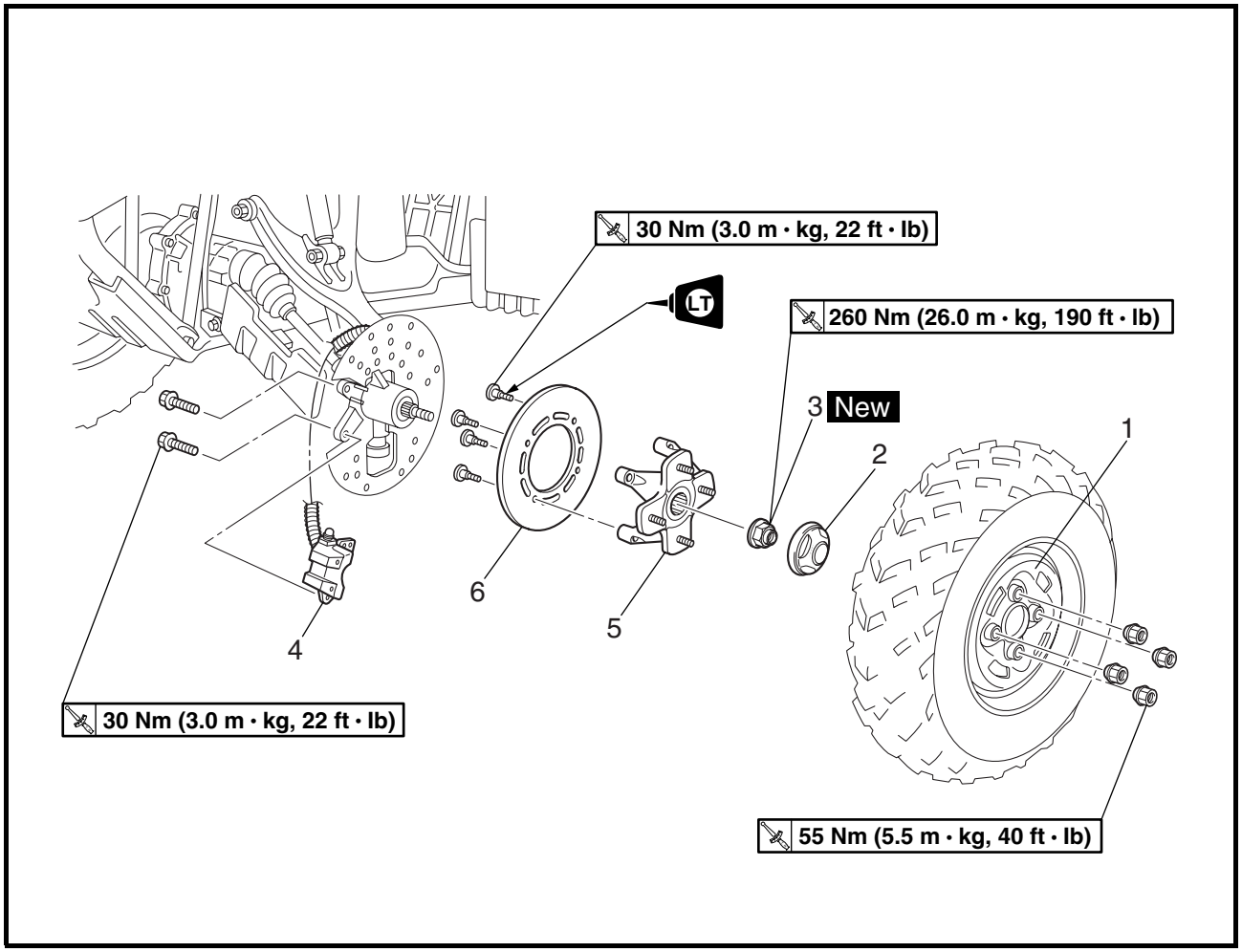

Order	Job name/Part name	Q'ty	Remarks
	Removing the front wheel		Remove the parts in the order below. Place the machine on a level surface. **WARNING** **Securely support the machine so there is no danger of it falling over.**
1	Front wheel	1	Refer to "INSTALLING THE FRONT WHEEL" in CHAPTER 8. (Manual No.: 5KM2-AE1)
2	Wheel cap	1	Refer to "INSTALLING THE FRONT WHEEL HUB" in CHAPTER 8. (Manual No.: 5KM2-AE1)
3	Axle nut	1	

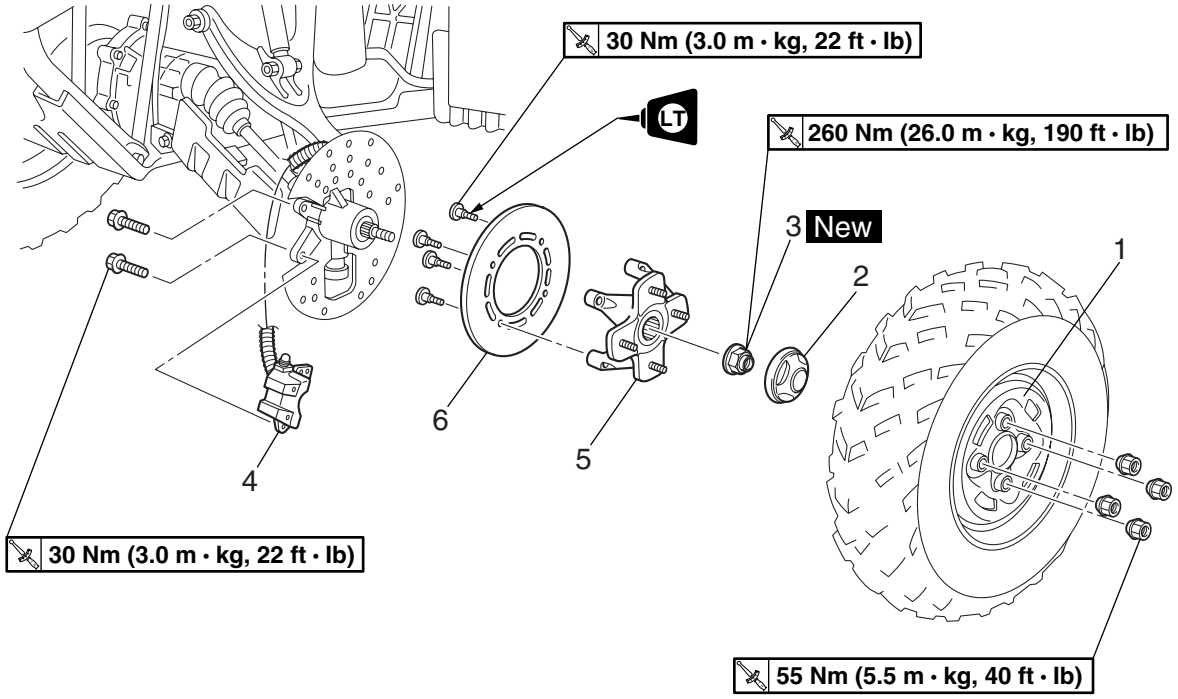

Order	Job name/Part name	Q'ty	Remarks
4	Brake caliper assembly	1	**NOTE:** Do not squeeze the brake lever when the brake caliper is off of the brake disc as the brake pads will be forced shut.
5	Front wheel hub	1	
6	Brake disc	1	For installation, reverse the removal procedure.

REAR WHEELS AND BRAKE DISC

REAR WHEELS

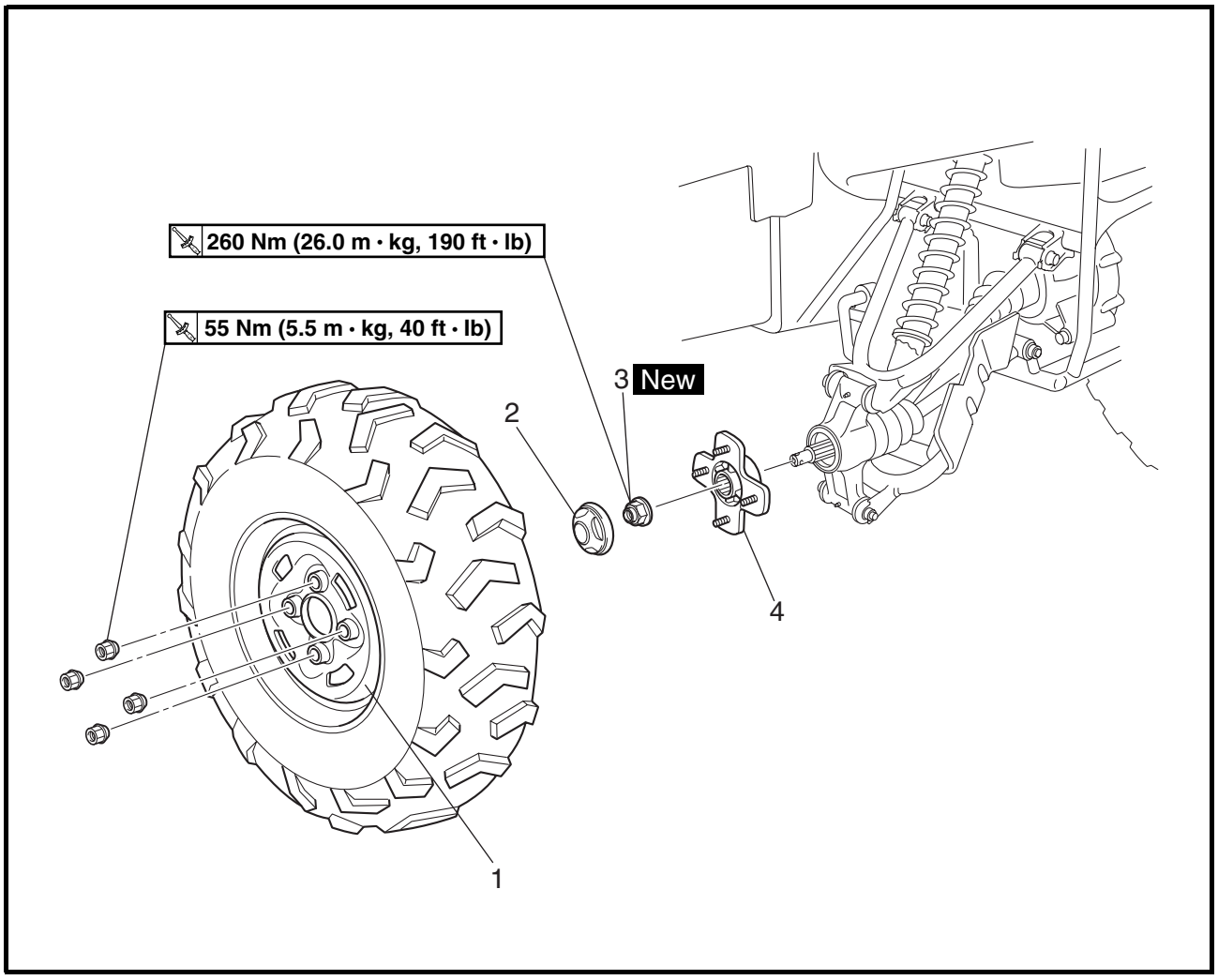

Order	Job name/Part name	Q'ty	Remarks
	Removing the rear wheel		Remove the parts in the order below. Place the machine on a level surface. **WARNING** **Securely support the machine so there is no danger of it falling over.**
1	Rear wheel	1	Refer to "INSTALLING THE REAR WHEEL" in CHAPTER 8. (Manual No.: 5KM2-AE1)
2	Wheel cap	1	Refer to "INSTALLING THE REAR WHEEL HUB" in CHAPTER 8. (Manual No.: 5KM2-AE1)
3	Axle nut	1	
4	Rear wheel hub	1	
			For installation, reverse the removal procedure.

STEERING SYSTEM

TIE ROD AND STEERING KNUCKLE

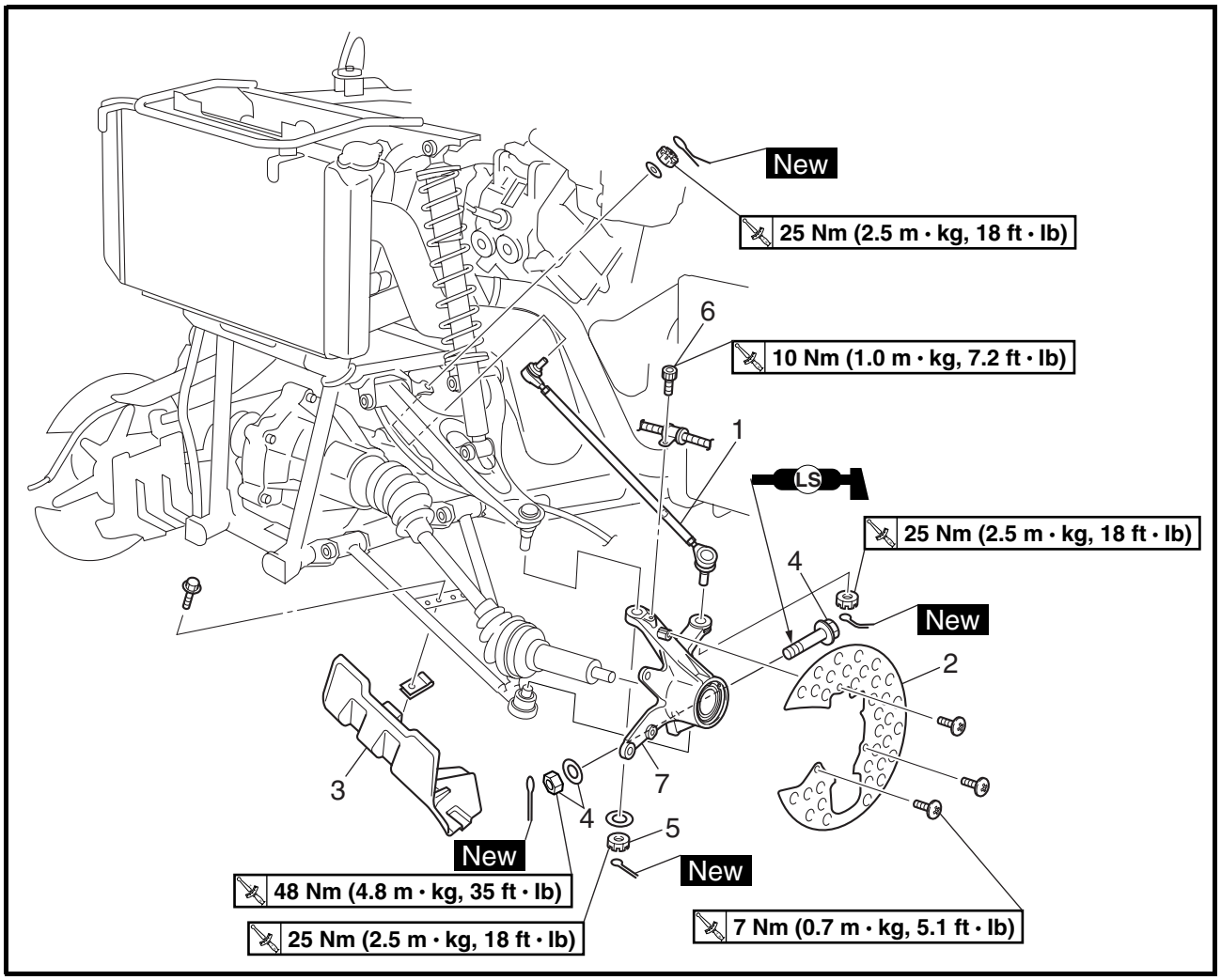

Order	Job name/Part name	Q'ty	Remarks
	Removing the tie rod and steering knuckle		Remove the parts in the order below.
	Front fender		Refer to "SEAT, CARRIERS, FENDERS AND FUEL TANK" in CHAPTER 3. (Manual No.: 5KM2-AE1)
	Front wheel/brake disc		Refer to "FRONT WHEELS".
1	Tie rod	1	Refer to "INSTALLING THE TIE ROD" in CHAPTER 8. (Manual No.: 5KM2-AE1)
2	Brake disc guard	1	
3	Front protector	1	
4	Bolt/washer/nut	1/1/1	
5	Nut	1	

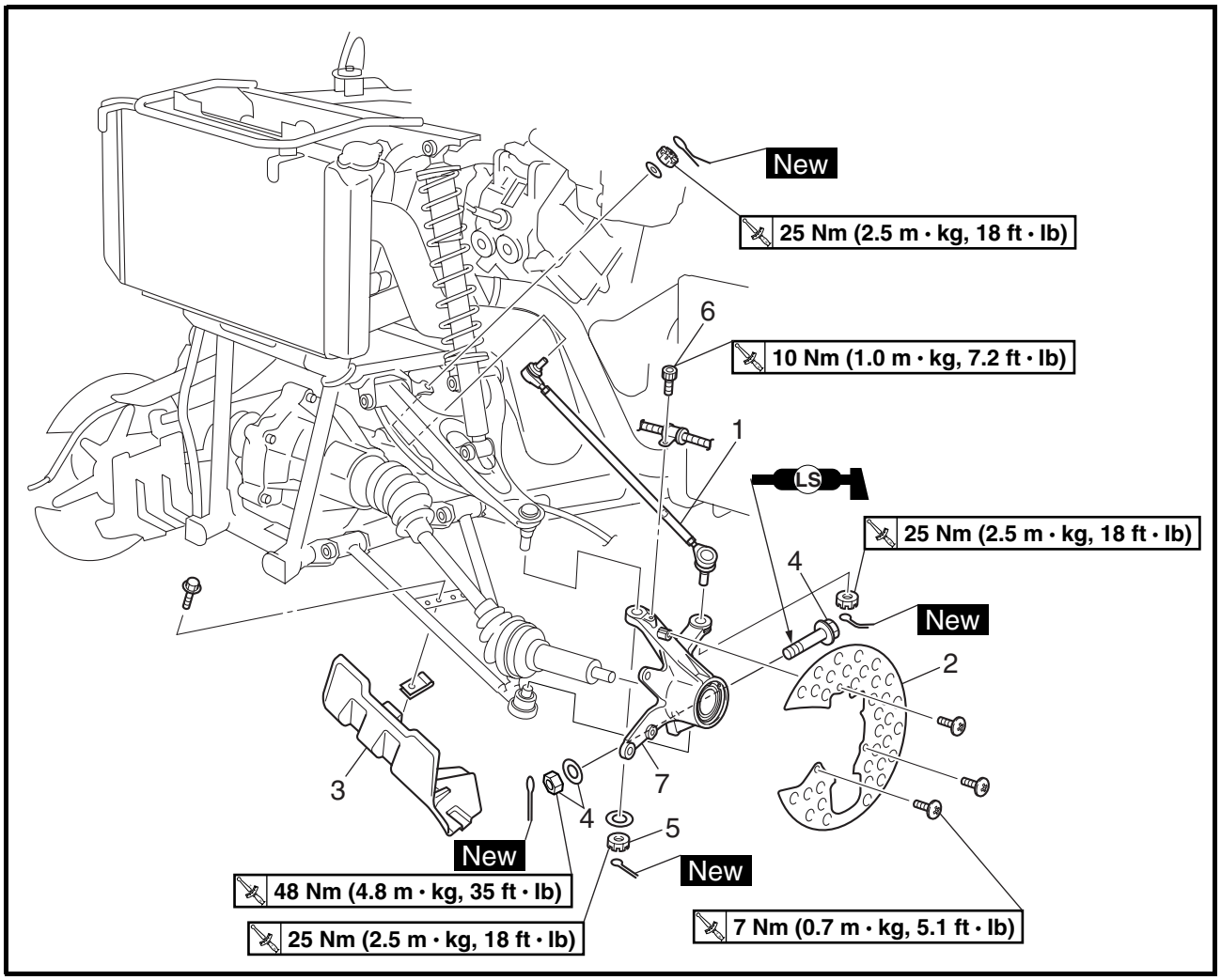

Order	Job name/Part name	Q'ty	Remarks
6	Brake hose holder bolt	1	
7	Steering knuckle	1	Refer to "REMOVING THE STEERING KNUCKLE" in CHAPTER 8. (Manual No.: 5KM2-AE1) For installation, reverse the removal procedure.

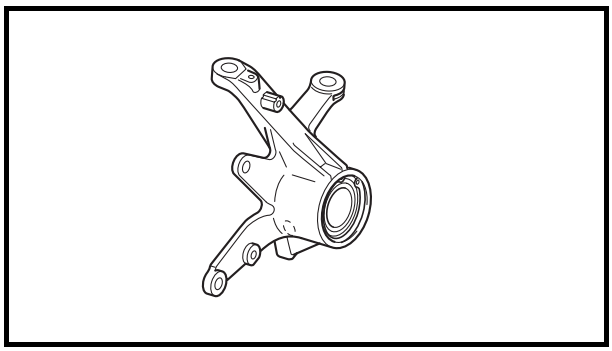

CHECKING THE STEERING KNUCKLE

1.Check:

- Steering knuckle
  Damage/pitting → Replace.

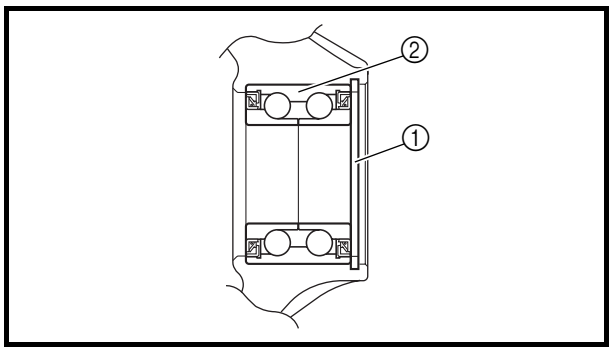

2.Check:

- Front wheel bearings
  Bearings allow play in the wheel hubs or unsmooth wheel operation → Replace.
- Oil seals
  Damage → Replace.

****

Replacement steps:

- Clean the outside of the steering knuckle.
- Remove the circlip ①.
- Drive out the bearing ②.

⚠ WARNING

Eye protection is recommended when using striking tools.

- Apply lithium-soap-based grease to the bearing.
- Install the new bearing.

CAUTION:

Do not strike the center race or balls of the bearing. Contact should be made only with the outer race.

- Install a new circlip.

****

REAR KNUCKLE AND STABILIZER

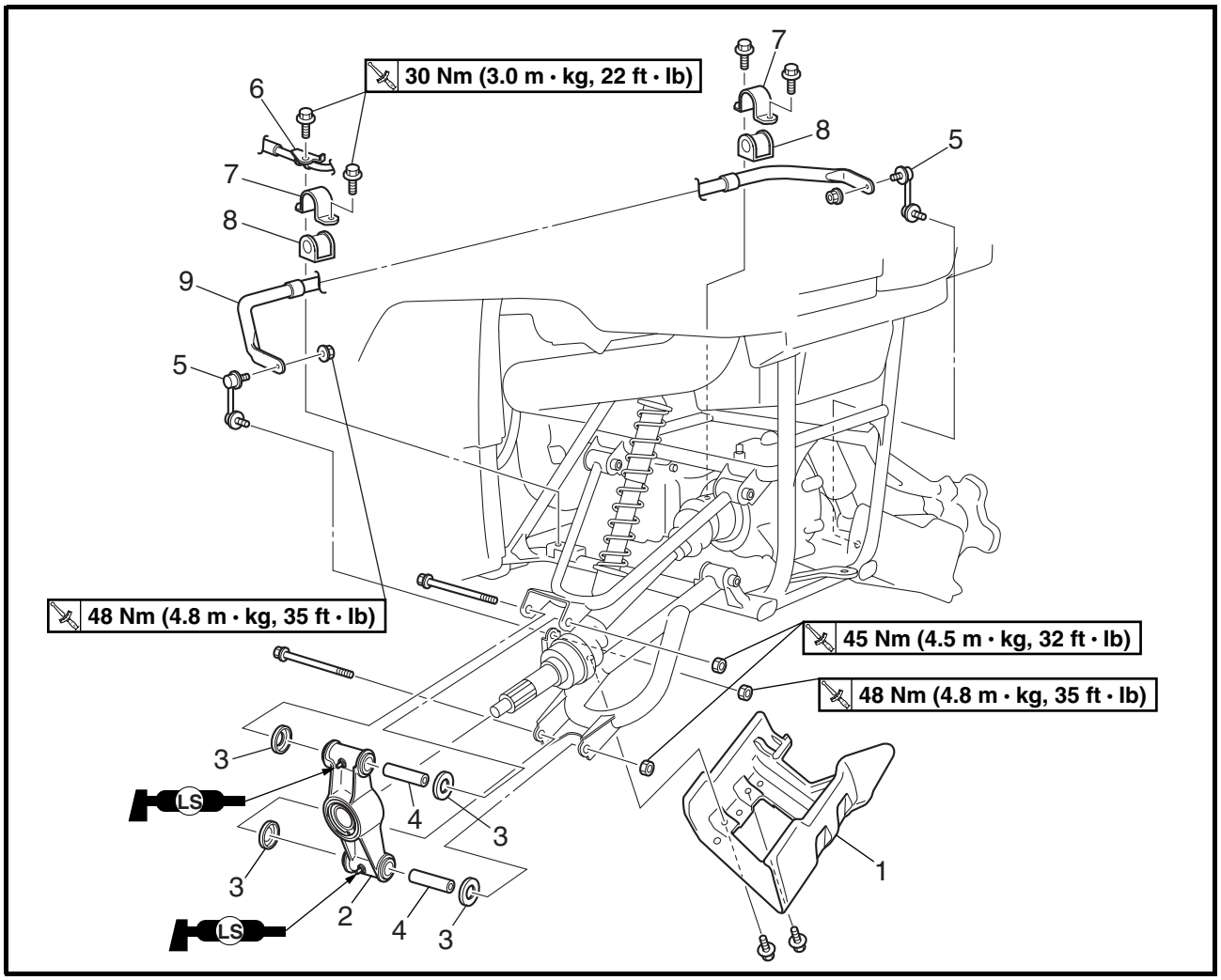

Order	Job name/Part name	Q'ty	Remarks
	Removing the rear knuckle and stabilizer		Remove the parts in the order below.
	Rear wheel hubs		Refer to "REAR WHEELS AND BRAKE DISC".
1	Rear protector	1	
2	Rear knuckle	1	
3	Spacer cover	4	
4	Spacer	2	
5	Stabilizer joint	2	
6	Brake hose holder	1	
7	Stabilizer holder	2	
8	Bushing	2	
9	Stabilizer	1	
			For installation, reverse the removal procedure.

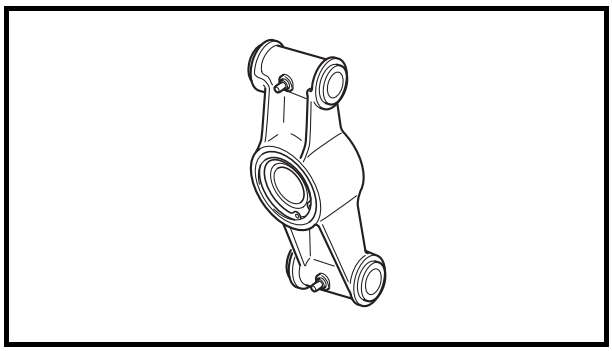

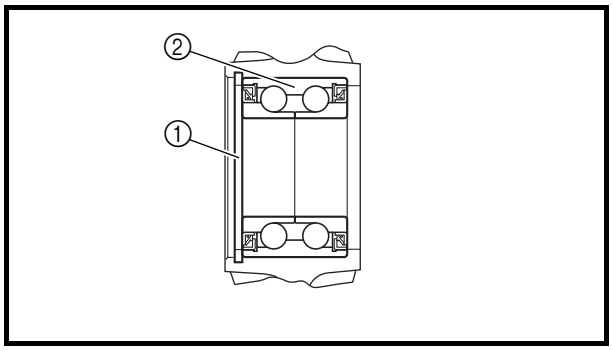

CHECKING THE REAR KNUCKLE

1.Check:
- Rear knuckle
  Damage/pitting → Replace.

2.Check:
- Rear wheel bearings
  Bearings allow play in the wheel hubs or unsmooth wheel operation → Replace.
- Oil seals
  Damage → Replace.

****

Replacement steps:
- Clean the outside of the rear knuckle.
- Remove the circlip ①.
- Drive out the bearing ②.

⚠ WARNING

Eye protection is recommended when using striking tools.

- Apply lithium-soap-based grease to the bearing.
- Install the new bearing.

CAUTION:

Do not strike the center race or balls of the bearing. Contact should be made only with the outer race.

- Install a new circlip.

****

REAR ARMS AND REAR SHOCK ABSORBER

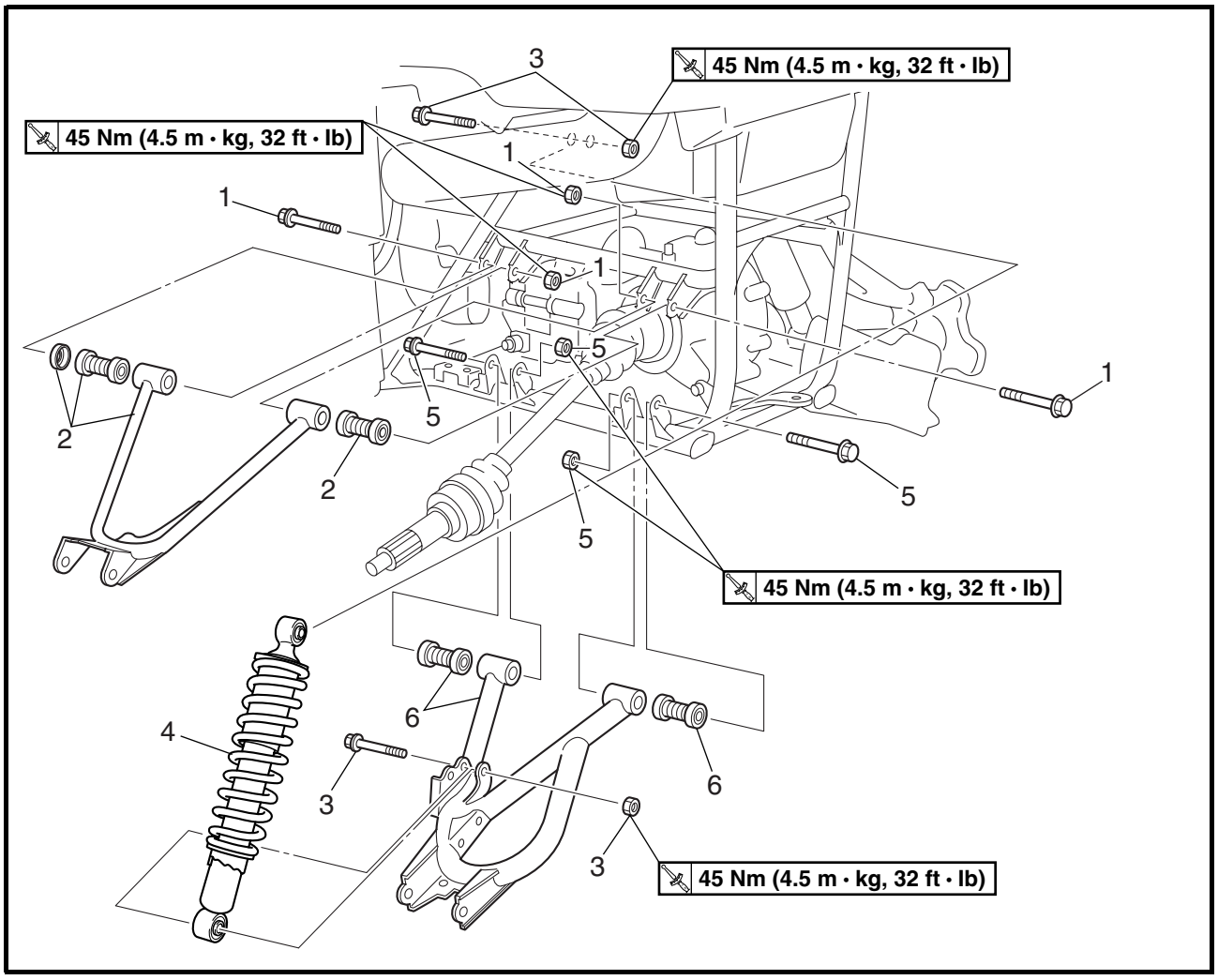

Order	Job name/Part name	Q'ty	Remarks
	Removing the rear arms and rear shock absorber		Remove the parts in the order below.
	Rear protector/rear knuckle/stabilizer		Refer to "REAR KNUCKLE AND STABILIZER".
1	Nut/bolt	2/2	
2	Rear arm (upper)/bushing/washer	1/2/1	
3	Nut/bolt	2/2	
4	Rear shock absorber	1	
5	Nut/bolt	2/2	
6	Rear arm (lower)/bushing	1/2	
			For installation, reverse the removal procedure.

YAMAHA

YAMAHA MOTOR CO., LTD.
2500 SHINGAI IWATA SHIZUOKA JAPAN